zigyan

PREVIOUS YEAR PAPER · 2019

OLYMPIAD · STAGE I

NSEA

National Standard Examination in Astronomy

2019

Question paper with official answer key

80	240	120 min	41
Questions	Maximum marks	Time	Paper code

Question paper and official answer key: Indian Association of Physics Teachers (IAPT), NSEA 2019, paper code 41.
Solutions and notes: Zigyan. This booklet is not an IAPT publication.

Prepare for the Olympiads with Zigyan

www.zigyan.com

zigyan

SCO No. 107, Sector 16, Faridabad, Haryana 121002
0129-4048800 · +91 92115 38800 · info@zigyan.com

zigyan

JEE 2026 RESULTS

OUR TOPPERS

When talent meets the right guidance.

Saksham Bishnoi and Sulokya Bibhuty - our JEE 2026 toppers from Zigyan, Sector 16 - with the programme they took and the rank they earned.



Rahul Kaushik Sir
Founder & Director, Zigyan Eduvision
23 years of teaching



Saksham Bishnoi

4 YEARS CLASSROOM

JEE ADVANCED 2026	JEE MAIN 2026
AIR 168	AIR 811
	99.95 percentile



Sulokya Bibhuty

3 YEARS CLASSROOM

JEE ADVANCED 2026	JEE MAIN 2026
AIR 1,315	AIR 1,095
	99.94 percentile

OLYMPIAD RESULTS

Above the Minimum Admissible Score - the national band for the subject

CHEMISTRY

- Sulokya Bibhuty — 3 Years Classroom
- Anay Gupta — 3 Years Classroom
- Akshat Khator — 3 Years Classroom
- Harshit Goyal — 4 Years Classroom
- Hardik Sharma — 3 Years Classroom
- Aarush Kumar — 1 Year Classroom

PHYSICS

- Sulokya Bibhuty — 3 Years Classroom
- Saksham Bishnoi — 4 Years Classroom

ASTRONOMY

- Sulokya Bibhuty — 3 Years Classroom

MATHEMATICS (IOQM)

- Priyanshi — 4 Years Classroom

Saksham Bishnoi qualified the Chemistry Olympiad twice and was selected for the Orientation-cum-Selection Camp at HBCSE, Mumbai.

16 selections	16 of 35	AIR 168
in JEE Advanced 2026	students of the batch selected	best JEE Advanced rank

Start where they started.

Register for ZEST - ₹200 · www.zigyan.com/scholarship/zest

+91 92115 38800
info@zigyan.com

Given in the question paper

Physical constants you may need....

Magnitude of charge on electron $e = 1.60\times10^{-19}$ C	Boiling point of hydrogen = $20.3K$
Mass of electron $m_e = 9.10\times10^{-31}$kg	Boiling point of helium = $4.2K$
Mass of proton $m_p = 1.67\times10^{-27}$kg	Boiling point of nitrogen = $77.4K$
Acceleration due to gravity $g = 9.8$ ms^{-2}	Boiling point of oxygen = $90.19K$
Universal gravitational constant $G = 6.67\times10^{-11}$ Nm^2/Kg^2	Permittivity of free space $\varepsilon_0 = 8.85\times10^{-12}$ C^2 / Nm^2
Universal gas constant $R = 8.31$ J / mol K	Permeability of free space $\mu_0 = 4\pi\times10^{-7}$ H/m
Boltzmann constant $k = 1.38\times10^{-23}$ J/K	Planck's constant $h = 6.62\times10^{-34}$ Js
Stefan's constant $\sigma = 5.67\times10^{-8}$ W / m^{2}K^4	Faraday constant = 96,500C / mol

PART A-1 · ONE CORRECT OPTION

Q. 1 – 80 · +3 for a correct answer, –1 for a wrong one

1. If a and b are the roots of $x^2 - 3x + p = 0$ while c and d are the roots of $x^2 - 12x + q = 0$. Also if a, b, c, d are in GP then the value of $\frac{(q+p)}{(q-p)}$ is

(A) $\frac{17}{15}$ (B) $\frac{19}{16}$
(C) $\frac{35}{32}$ (D) $\frac{9}{8}$

2. The date on which the Earth is at a minimum distance from the Sun is around

(A) 3 January (B) 4 July (C) 22 June (D) 21 September

3. The plane of the circular coil is held in the east-west direction. A steady current passed through the coil produces a magnetic field (B) equal to $\sqrt{2}$ times the horizontal component of the earth's magnetic field (B_H) at the place. Now the plane of the coil is rotated carefully through an angle 45^0 about the vertical axis through its diameter. What is the deflection of the needle placed at the centre of the coil with respect to B_H ?

(A) $\tan^{-1}\frac{1}{2}$ (B) $\tan^{-1}\frac{1}{3}$
(C) $\tan^{-1} 2$ (D) $\tan^{-1} 3$

4. If the ratio of the sum of first n terms of two different AP series is (7n + 1) : (4n + 27), the ratio of their 10th term is

(A) $\frac{135}{102}$ (B) $\frac{134}{103}$
(C) $\frac{78}{69}$ (D) $\frac{103}{89}$

5. The solution to the set of simultaneous equations with three variables x, y, z

$x + y + z = 5$; $x^2 + y^2 + z^2 = 5$ and $xy + yz + zx = 10$ are

(A) all real
(B) one real, other two complex
(C) two real, one complex
(D) all complex

6. An asteroid's closest approach to the Sun (perihelion) is 2 AU, and farthest distance from the Sun (aphelion) is 4 AU. The period of revolution of the asteroid and the eccentricity of the orbit are respectively

(A) 4.2 Year, 0.40
(B) 4.8 Year, 0.50
(C) 5.2 Year, 0.33
(D) 6.0 Year, 0.20

7. A circular coil carrying a definite current ' i ' produces a magnetic field $B_0 = 2.83$ T at the centre 'O' of the coil. The magnetic field produced by the same current at a point ' P ' on the axis of the coil, where the angle OPM as shown in figure is 45^0, is

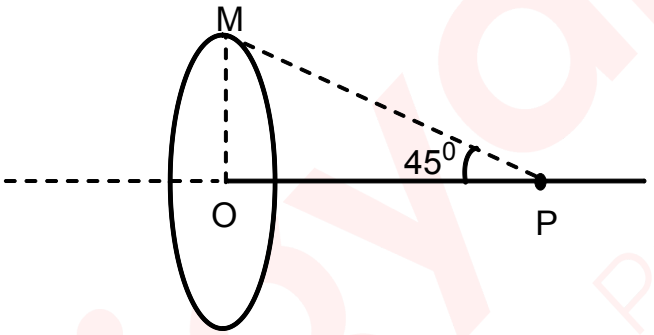

(A) 1.23 T
(B) 1.00 T
(C) 1.78 T
(D) 2.83 T

8. A narrow U-tube of uniform cross-section, having a liquid of density 'ρ', is made to move with an acceleration 'a' along the horizontal direction as shown in the figure. What should be the value of 'a' so that the difference in the level in the two arms of the tube is 3 cm ($g = 10 ms^{-2}$)?

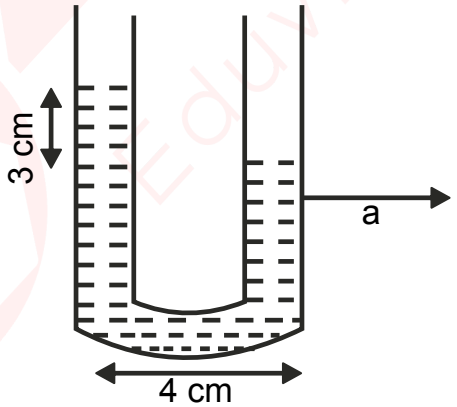

(A) 6.5 ms^{-2}
(B) 5.5 ms^{-2}
(C) 13.3 ms^{-2}
(D) 7.5 ms^{-2}

9. The value of $4\sin 50^0 - \sqrt{3}\ \tan 50^0$ is

(A) −2
(B) −1
(C) 1
(D) $\sqrt{3}$

10. The value of Z = $\cos 10^0 \cos 30^0 \cos 50^0 \cos 70^0$ is

(A) $\frac{3}{8}$ (B) $\frac{5}{16}$

(C) $\frac{5}{8}$ (D) $\frac{3}{16}$

11. The number of times a 5th magnitude star is brighter than an 8th magnitude star is

(A) 15.85 (B) 3 (C) 20 (D) 6.4

12. A uniform gravitational field (E) exists in a certain region of space. Consider two parallel planes perpendicular to the field E as shown in the figure. Three statements are given below

(i) Work done by the force in moving a particle of mass m from point A to B is $\frac{1}{2}mEd$

(ii) Work done in moving a particle from point B to D is zero

(iii) Work done in moving a particle from A to D is $\frac{\sqrt{3}}{2}mEd$

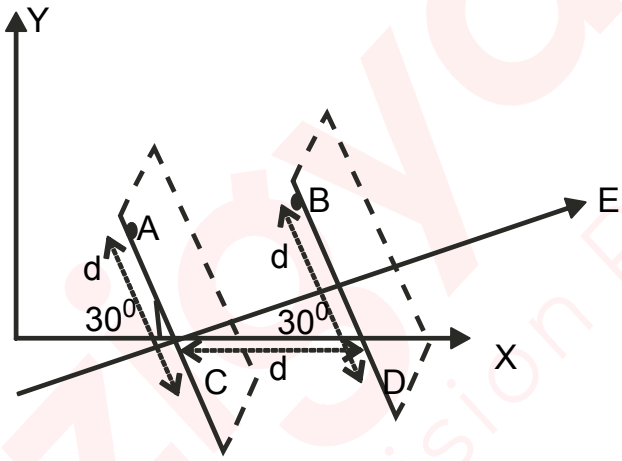

Choose the correct statement (s)

(A) (i), (ii) and (iii) (B) (i) and (ii) only

(C) (i) only (D) (ii) and (iii) only

13. A ball is projected with a speed of $10\sqrt{3}$ ms^{-1} at angle of 60^0 from the foot of a wedge as shown in the figure. The wedge also starts moving horizontally with a speed of $10\sqrt{3}$ ms^{-1}. The time after which the ball hits the inclined surface of the wedge is

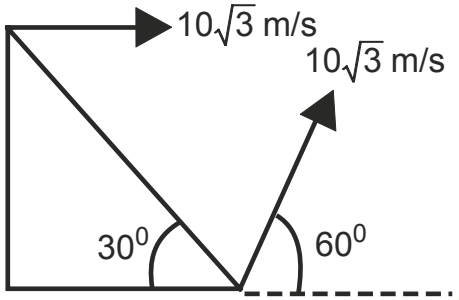

Physical constants you may need....

Acceleration due to gravity g = 9.8 ms^{-2}

(A) $\sqrt{2}$ s
(B) 2 s
(C) $\sqrt{3}$ s
(D) 3 s

14. In the previous question (number 13), what should be the velocity of the wedge so that the ball hits the incline perpendicular to it

Question 13: A ball is projected with a speed of $10\sqrt{3}$ ms^{-1} at angle of 60^0 from the foot of a wedge as shown in the figure. The wedge also starts moving horizontally with a speed of $10\sqrt{3}$ ms^{-1}.

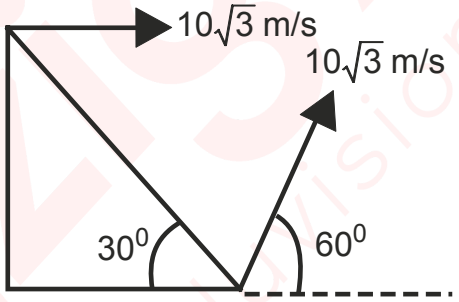

(A) $8\sqrt{3}$ ms^{-1} in the same direction
(B) $5\sqrt{3}$ ms^{-1} in the opposite direction
(C) $16\sqrt{3}$ ms^{-1} in the same direction
(D) $15\sqrt{3}$ ms^{-1} in the opposite direction

15. If 'p' is the perpendicular distance from the origin to the straight line x cos θ − y sin θ = k cos 2θ and 'q' is the corresponding distance to the straight line x sec θ − y cosec θ = k , then the value of $p^2 + 4q^2$ is

(A) $2k^2$
(B) k^2
(C) $4k^2$
(D) $3k^2$

16. If $\vec{a}$ and $\vec{b}$ are unit vectors and θ is the angle between $\vec{a}$ and $\vec{b}$ then $\sin\frac{\theta}{2}$ is equal to

(A) 1
(B) $\frac{1}{2}\left|\vec{a} - \vec{b}\right|$
(C) 0
(D) $\frac{1}{2}\left|\vec{a} + \vec{b}\right|$

17. Which of the following statement is true for Saturn and Jupiter?

(A) both rotate faster than the Earth

(B) both rotate slower than the Earth

(C) only one rotates rapidly while the other rotates very slowly compared to Earth

(D) their periods of rotation are linked to their period of revolution

18. In which of the following cases friction cannot be zero for the disc having pure rolling?

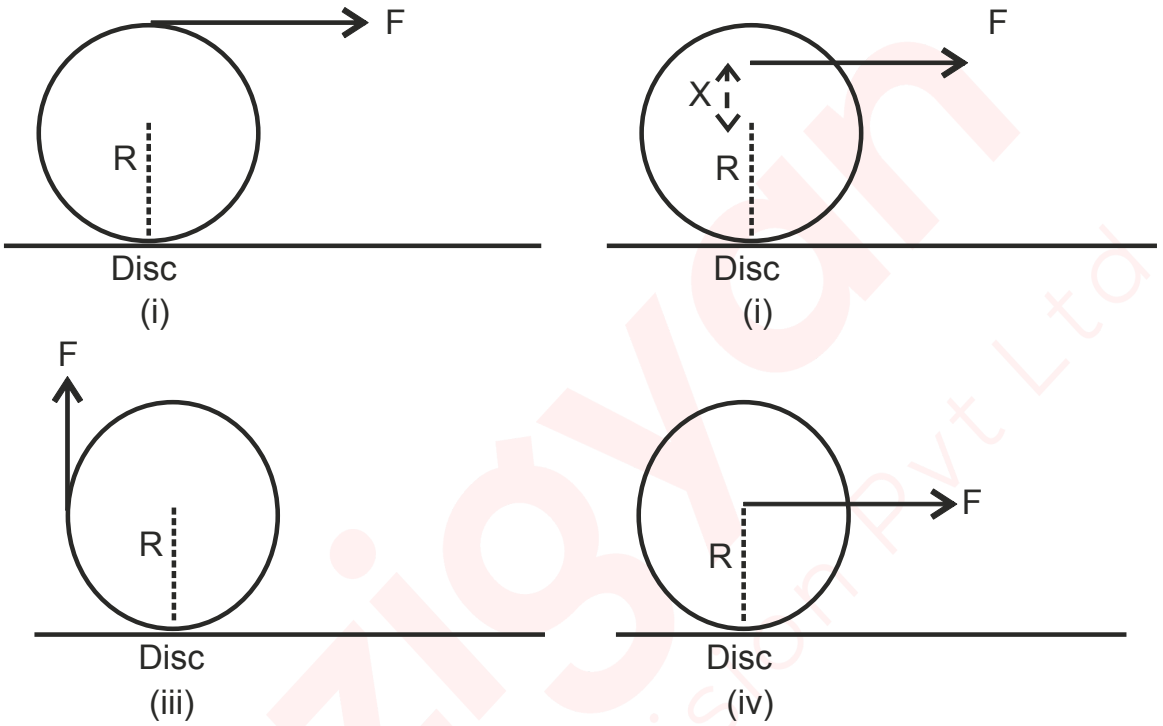

(A) (i), (iii) and (iv)

(B) (i) and (ii) only

(C) (i), (ii), (iii) and (iv)

(D) (i), (ii) and (iii)

19. A and B are two locations 120 m apart with a 40 m tall wall midway between them. The minimum velocity and the corpresponding angle at which a ball be projected from A so as just to clear the wall and strike at B are

Physical constants you may need....

Acceleration due to gravity g = 9.8 ms^{-2}

(A) 28.63 ms^{-1} and 53^0

(B) 28.63 ms^{-1} and 37^0

(C) 35.06 ms^{-1} and 53^0

(D) 28.28 ms^{-1} and 37^0

20. The argument [arg(z)] of the complex number $z = \left(-\frac{1}{2} + i\frac{\sqrt{3}}{2}\right)$ is

(A) $\frac{\pi}{6}$

(B) $\frac{\pi}{3}$

(C) $\frac{2\pi}{3}$

(D) $\frac{4\pi}{3}$

21. The eccentricity of the ellipse represented by $4x^2 + 9y^2 - 16x = 20$ is

(A) $\frac{3}{5}$ (B) $\frac{\sqrt{5}}{3}$

(C) $\frac{\sqrt{3}}{5}$ (D) $\frac{1}{2}$

22. Which of the following is TRUE for Retrograde motion (apparent motion of planets in a direction opposite to the normal)?

(A) caused by epicycles

(B) undergone only by superior planets

(C) undergone only by inferior planets

(D) an effect due to the projection of planet's orbit onto the sky

23. A proton and a deuteron are projected into a uniform magnetic field with velocities 50×10^6 ms^{-1} and 43.3×10^6 ms^{-1} at angles 30^0 and 60^0 respectively with respect to the direction of the magnetic field. Compare the respective pitch of their helical paths.

(A) 1:2 (B) 2:1 (C) 1:1 (D) 4:1

24. In a time of 4.606 days a radioactive sample loses $\left(\frac{4}{5}\right)^{th}$ of the amount present initially. The mean life of the sample is

(A) 2.2 day (B) 2.86 day (C) 2.46 day (D) 2.95 day

25. Assuming radius of the earth to be 6400 Km, the distance to the horizon visible from a 180 m tall building is close to

(A) 56 Km (B) 48 Km (C) 90 Km (D) 64 Km

26. Since none of the six trigonometric functions are one-to-one, they are restricted in order to have their unambiguous inverse functions. This range of the inverse trigonometric functions is called the range of the principal values. Range of principal value of $\cot^{-1}(x)$ is

(A) $-\frac{\pi}{2}$ to $+\frac{\pi}{2}$

(B) $-\pi$ to $+\pi$

(C) 0 to π

(D) $-\frac{\pi}{2}$ to 0 or 0 to $\frac{\pi}{2}$

27. On which of the following planets would the Sun rise in the west?

(A) Saturn (B) Mercury (C) Venus (D) Jupiter

28. A prism of refracting angle 60^0 is made of a material of refractive index 1.732. The angle of minimum deviation produced by this prism is close to

(A) 30^0 (B) 38^0 (C) 60^0 (D) 45^0

29. Two particles undergo simple harmonic motion given by $y_1 = a \sin 50\pi t$ and $y_2 = a \sin 40\pi t$ respectively. Initially the particles are in phase. After what minimum time will the particles be in phase again?

(A) 0.1 s (B) 0.2 s (C) 0.25 s (D) 0.15 s

30. Bisectors of vertex angles A, B and C of a triangle ABC intersect its circum-circle at the points D, E and F respectively. The angle EDF is equal to

(A) $90^o - A/2$ (B) $45^o + A/2$ (C) $90^o - B/2$ (D) A

31. Δ ABC is right angled at B. A square is constructed on the side AC opposite to that of angle B. P is the centre of this square. The angle PBC is equal to

(A) 30° (B) 45°

(C) 60° (D) None of the above

32. A line through the three stars in Orion's belt appears to point towards which one of the following star?

(A) Vega (B) Polaris (C) Rigel (D) Sirius

33. In an experiment on photoelectric effect, the maximum speed of photoelectron (v_{max}) is measured for different frequencies (f) of incident radiation. On a graph of v_{max} versus f, the slope of the curve at any point gives

(A) Planck's constant (h)

(B) Planck's constant divided by electron charge (h/e)

(C) de-Broglie wavelength of the photoelectron

(D) Wavelength of incident radiation

34. A dielectric slab of constant $\varepsilon_r = 2$ is inserted into a parallel plate capacitor as shown in the figure. The spring attached to the slab can set the slab into oscillation of frequency ω. At equilibrium, end of the slab is at the middle of the plates. If the slab is pulled till the entire slab is inside the capacitor and allowed to oscillate, the current flowing through the circuit is

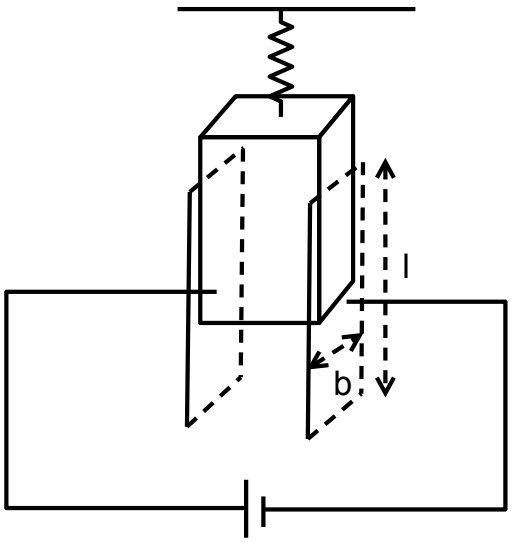

(A) $-\frac{b\varepsilon_0 V\omega\ell}{2d}\sin(\omega t)$ (B) $+\frac{b\varepsilon_0 V\omega\ell}{2d}\cos(\omega t)$

(C) $-\frac{b\varepsilon_0 V\omega\ell}{2d}\sin^2(\omega t)$ (D) $-\frac{b\varepsilon_0 V\omega\ell}{2d}\cos^2(\omega t)$

35. If a, b, c are in G.P. and $\log_c a$, $\log_b c$ and $\log_a b$ are in A.P., the common difference of the A.P. is

(A) $\frac{1}{2}$ (B) $\frac{2}{3}$

(C) 1 (D) $\frac{3}{2}$

36. ABCD is a line segment trisected by the points B and C while P is any point on the circle whose diameter is BC. If angles APB and CPD are α and β respectively, the value of tanα × tan β is

(A) $\frac{1}{2}$ (B) $\frac{1}{4}$

(C) $\frac{3}{8}$ (D) $\frac{3}{2}$

37. A particle is projected with a velocity 20 ms^{-1}, at angle of 60° to the horizontal. Then radius of curvature of its trajectory at a point where its velocity makes an angle of 37° with the horizontal is close to (g = 10 ms^{-2})

(A) 16 m (B) 19.53 m (C) 15.52 m (D) 25 m

38. A body is thrown up in a lift with a velocity u relative to moving lift and its time of flight is t. The acceleration with which the lift is moving will be

(A) $\frac{u^2}{t} - g$ (B) $\frac{2u}{t} - g$

(C) $\frac{2u}{t}$ (D) none

39. A particle of mass m, initially at rest, is acted upon by a variable force F for a brief interval of time T. It begins to move with a velocity u just after the force stops acting. F, as a function of time, is shown in the graph. The value of u is

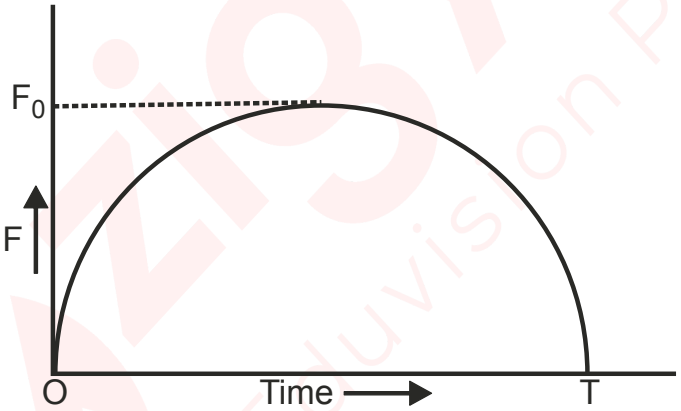

(A) $u = \frac{\pi F_0^2}{2m}$ (B) $u = \frac{\pi T^2}{8m}$

(C) $u = \frac{\pi F_0 T}{4m}$ (D) $u = \frac{F_0 T}{2m}$

40. If the product of two roots of the equation $x^4 - 11x^3 + kx^2 + 269x - 2001 = 0$ is −69, the value of k is

(A) 10 (B) 1 (C) −5 (D) −10

41. By a chord of the curve $y = x^3$ we mean any line joining two points on it. The number of chords which have slope −1 is

(A) Infinite (B) 0 (C) 1 (D) 2

42. The universe is estimated to be between ten and twenty billion years old. This estimate is based on the value of the constant(s)

(A) Speed of light (B) Fine structure constant

(C) Planck constant (D) Hubble constant

43. Consider the charge configuration and a spherical Gaussian surface as shown in the figure. While calculating the flux of the electric field over any part of the spherical surface the electric field will be due to

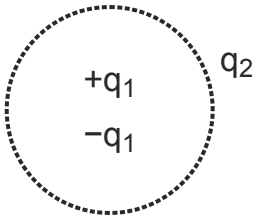

(A) q_2
(B) Only the positive charges
(C) All the charges
(D) $+q_1$ and $-q_1$

44. The expression for electric potential at any point due to an electric dipole ($\vec{p}$) is (with usual notation)

(A) $k\frac{\vec{p}\times\vec{r}}{r^2}$
(B) $k\frac{\vec{p}\times\vec{r}}{r^3}$
(C) $k\frac{\vec{p}\,.\,\vec{r}}{r^2}$
(D) $k\frac{\vec{p}\,.\,\vec{r}}{r^3}$

45. A function f (n) is defined by $f(n)=\frac{4^n-4^{-n}}{4^n+4^{-n}}$ for every integer n.
If p and q are integers such that p > q, the sign of f (p) – f (q) is

(A) Positive (B) Negative (C) Indeterminate (D) zero

46. The first term of a descending A.P. series of 4 distinct positive integers with greatest possible last term and sum 2004 is

(A) 552 (B) 536 (C) 512 (D) 504

47. If the Earth is made to rotate in the opposite sense (clockwise rather than counterclockwise), the length of a solar day will be

(A) 23 hr 56 min (B) 24 hr (C) 23 hr 52 min (D) 24 hr 4 min

48. In the case of a diatomic gas, the ratio of the heat used in doing work for expansion of the gas to the total heat given to it at constant pressure is

(A) $\frac{2}{5}$
(B) $\frac{3}{7}$
(C) $\frac{2}{7}$
(D) $\frac{5}{7}$

49. Water coming out of the mouth of a tap and falling vertically in streamline flow forms a tapering column, i.e., the area of cross-section of the liquid column goes on decreasing as it moves down, the most accurate explanation for this is

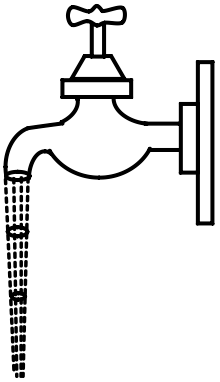

(A) As the water moves down, its speed increases and hence its pressure decreases. It is then compressed by the atmosphere

(B) Falling water tries to reach a terminal velocity and hence reduces the area of cross-section to balance upward and downward forces

(C) The mass of water flowing past any cross-section must remain constant. Also, water is almost incompressible. Hence, the rate of volume flow must remain constant.

(D) The surface tension causes the exposed surface area of the liquid to decrease continuously

50. If x, y, z are positive integers with x + y + z = 10, the maximum value of xy + yz + zx + xyz is

(A) 69 (B) 59 (C) 64 (D) 61

51. If a and b are positive real numbers and AB is a line segment in a plane. The possible number of distinct points C in the plane for which the triangle ABC will have the lengths of medians and altitudes through C as a and b respectively is

(A) 1 (B) 2 (C) 4 (D) Infinitely many

52. The pair of planets, that is never visible at midnight is

(A) Mars and Neptune (B) Venus and Neptune

(C) Neptune and Mercury (D) Mercury and Venus

53. A drop of water is broken into two droplets of equal size. For this process, the correct statement is

(A) The sum of temperature of the two droplets together is equal to the original temperature of the drop

(B) The sum of masses of the two droplets is equal to the original mass of the drop

(C) The sum of the radii of two droplets is equal to the radius of the original drop

(D) The sum of the surface areas of the two droplets is equal to the surface area of the original drop

54. A bullet of mass m moving horizontally with velocity v strikes a wooden block of mass M suspended with a string of length l. The bullet gets embedded into the block as a result the block rises up to a height h. The initial speed of wooden block and the embedded bullet system is

(A) $\sqrt{2gh}$ (B) $\frac{M+m}{m}\sqrt{2gh}$

(C) $\frac{m}{M+m}2gh$ (D) $\frac{M+m}{M}\sqrt{2gh}$

55. The number of diagonals in a regular polygon of 100 sides is

(A) 4950 (B) 4850 (C) 4750 (D) 4650

56. Let a, b, c and p, q, r be all positive real numbers such that a, b, c are in G.P. and $a^p = b^q = c^r$. Then

(A) p, q, r are in G.P.
(B) p, q, r are in A.P.
(C) p, q, r are in H.P.
(D) p^2, q^2, r^2 are in G.P.

57. If you look overhead at 6 p.m. (standard sunset time) and notice that the moon is directly overhead, what phase is it in?

(A) Last quarter
(B) First quarter
(C) Full moon
(D) 12th day from new moon

58. The potential energy of a particle in a certain field has the form $U = \frac{a}{r^2} - \frac{b}{r}$, where a and b are positive constants and r is the distance from the centre of the field. Find the value of r_0 corresponding to the equilibrium position of the particle. Is the equilibrium a stable or unstable

(A) $\frac{2a}{b}$ stable equilibrium
(B) $\frac{a}{b}$ stable equilibrium
(C) $\frac{2a}{b}$ unstable equilibrium
(D) $\frac{a}{b}$ unstable equilibrium

59. The force acting on a particle is shown as a function of the position in a one dimensional system. The incorrect statement is

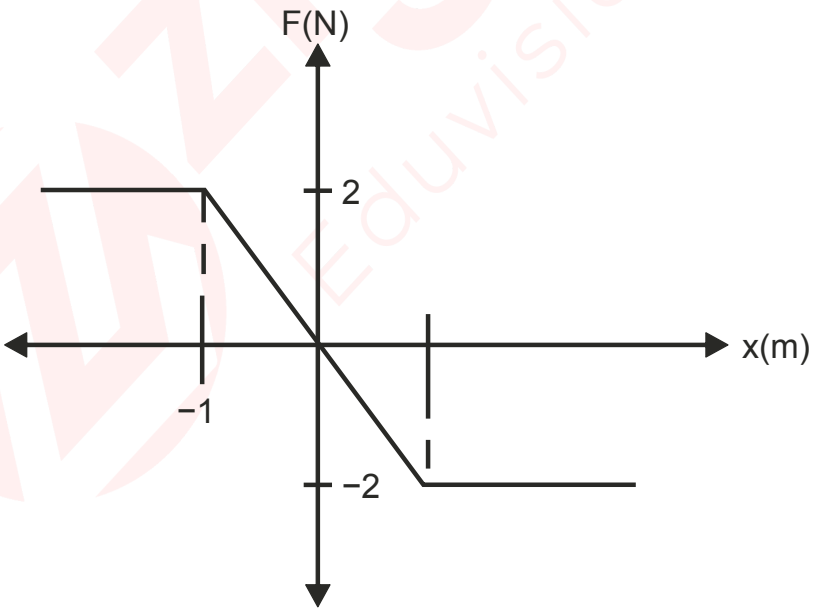

(A) If total energy of the system is 1 J, motion is SHM.
(B) If total energy of the system is 2J, motion is periodic.
(C) Work done on the particle as it moves from x= 3 m to 2 m is 2J.
(D) Work done on the particle as it moves from x = 3 m to 2 m is −2J.

60. Let S_k be the sum of an infinite G.P. whose first term is k and common ratio is $\frac{k}{(k+1)}$ $(k > 0)$. Then the value of $\sum_{k=1}^{k=\infty} \frac{(-1)}{S^k}$ is equal to

(A) $\log_e 4$ (B) $\log_e 2 - 1$ (C) $1 - \log_e 2$ (D) $1 - \log_e 4$

61. Which of the following is the closest to the distance in kilometers of 30° extent of longitude on the surface of the earth along the equator? How much is the corresponding distance along a small circle (parallel to the equator) at 60^oN latitude?

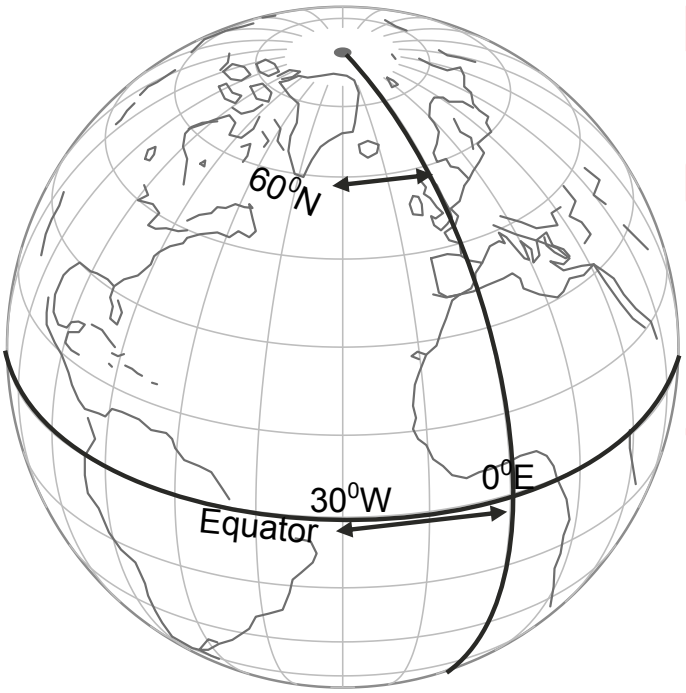

(A) 3500 Km, 3000 Km (B) 3000 Km, 2000 Km (C) 2500 Km, 1750 Km (D) 3300 Km, 1650 Km

62. Any location on the surface of Earth, as a sphere, is determined by two coordinates – Latitude and Longitude. Latitude of the North Pole is 90 degree. Its corresponding longitude is

(A) 0 degree
(B) 90 degree
(C) 180 degree
(D) None of these / indeterminate

63. Two long wires AB and CD carrying currents I_1 and I_2 are perpendicular to each other as shown in the figure (wires are insulated from each other)

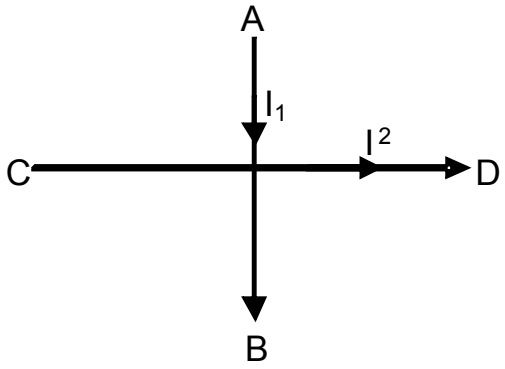

(A) Force on wire AB is towards left
(B) Force on wire AB is towards right.
(C) Torque on wire AB is clockwise.
(D) Torque on wire AB is anticlockwise.

64. A right circular cone of the height h and radius r is suspended in liquid of density (ρ). The density of cone is 2ρ and its circular face is at a depth $\frac{h}{3}$ The force exerted by liquid on the curved surface of cone is

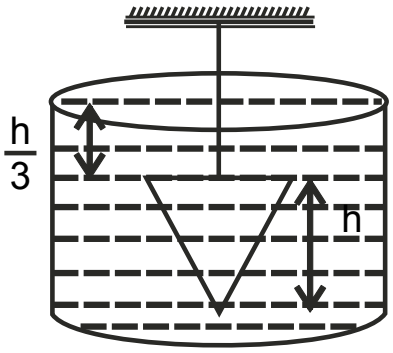

(A) zero
(B) $\frac{\pi r^2 h\rho g}{3}$
(C) $\pi r^2 h\rho g$
(D) $\frac{2\pi r^2 h\rho g}{3}$

65. A straight line through the point of intersection of the line x + 2y = 4 and 2x + y = 4 meets the coordinate axes at A and B. The locus of the midpoint of AB is

(A) 3(x + y) = 2xy (B) 2(x + y) = 3xy (C) 2(x + y) = xy (D) (x + y) = 3xy

66. Let y be the solution of the differential equation $x\frac{dy}{dx} = \frac{y^2}{1 - y\log x}$ satisfying y(1) = 1. Then y satisfies

(A) $y = x^{y-1}$ (B) $y = x^y$ (C) $y = x^{y+1}$ (D) $y = x^{y+2}$

67. The circle on the celestial sphere along which declination of a star is measured is called

(A) Diurnal circle (B) Great circle (C) Hour circle (D) Meridian

68. A circular wire frame of radius R is dipped in a soap solution of surface tension S. When it is taken out, a thin soap film is formed inside the frame. If cross sectional area of wire is A, then the stress developed in the wire due to surface tension is

(A) $\frac{\pi SR}{A}$ (B) $\frac{SR}{A}$

(C) $\frac{2SR}{A}$ (D) $\frac{SR}{2A}$

69. If two waves represented by $y_1 = 4 \sin \omega t$ and $y_2 = 3\sin\left(\omega t + \frac{\pi}{3}\right)$ interfere at a point, the amplitude of the resulting wave will be about

(A) 7 (B) 6 (C) 5 (D) 3.5

70. The value of $\lim_{n \to \infty} \frac{(n!)^{1/n}}{n}$ is

(A) 1 (B) $\frac{1}{e^2}$

(C) $\frac{1}{2e}$ (D) $\frac{1}{e}$

71. The value of the integral $\int_1^5 [\,|x-3| + |1-x|\,]\,dx$ is equal to

(A) 4 (B) 8 (C) 12 (D) 16

72. The definition of a nautical mile is

(A) one arc minute of latitude along any line of longitude

(B) one arc minute of longitude along any line of latitude

(C) one arc second of latitude along any line of longitude

(D) one arc second of longitude along any line of latitude

73. If the earth were to become a black hole, the minimum radius to which it should be compressed is about (mass remains constant, radius of earth = 6400 km)

Physical constants you may need....

Acceleration due to gravity g = 9.8 ms^{-2}

(A) 1.8 m (B) 9.0 mm (C) 3.6 cm (D) 1.8 km

74. The in-centre of an equilateral triangle is (1,1) and the equation of one of the sides is 3x + 4y + 3 = 0. Then the equation of the circum-circle of the triangle is

(A) $x^2 + y^2 - 2x - 2y - 2 = 0$ (B) $x^2 + y^2 - 2x - 2y - 14 = 0$

(C) $x^2 + y^2 - 2x - 2y + 2 = 0$ (D) $x^2 + y^2 - 2x - 2y + 14 = 0$

75. How many odd numbers greater than 700000 can be formed using the digits 4, 5, 6, 7, 8, 9, 0 if repetitions are allowed ?

(A) 216 (B) 4920 (C) 9261 (D) 21609

76. The FALSE statement about planetary configurations is,

(A) A superior planet can have an elongation between 0 and 180 degree

(B) Quadrature is when the elongation of a superior planet is 90 degree

(C) Quadrature is when the elongation of an inferior planet is 90 degree

(D) An inferior planet has zero elongation when in conjunction

77. When an electron in a hydrogen like atom is excited from a lower orbit to a higher orbit its

(A) kinetic energy increases and potential energy decreases.

(B) both kinetic energy and potential energy increases.

(C) both kinetic energy and potential energy decrease

(D) kinetic energy decreases and potential energy increases

78. The number of divisors of 480 of the form $8n + 4$ ($n \geq 0$), where n is an integer is

(A) 3 (B) 4 (C) 8 (D) 10

79. The orbital period of Jupiter is 4333 mean solar days and Jupiter's mass is 1/1048 times the Sun's mass. The orbital period of a small body, of negligible mass, moving in an elliptical orbit round the Sun with the same major axis as that of Jupiter is closest to

(A) 4329 days (B) 4333 days (C) 4335 days (D) 4339 days

80. One Astronomical Unit (AU) is defined as the mean distance between the Sun and the Earth: 1 AU ~ 150 million kilometer. Even this unit is also small for measuring large stellar distances which are quoted in 'light year' or 'parsec'. A star one parsec away from the Earth produces a parallax of one second of arc when viewed from the Earth six months apart in its orbit around the Sun, as shown in the accompanying figure. There by one parsec is close to

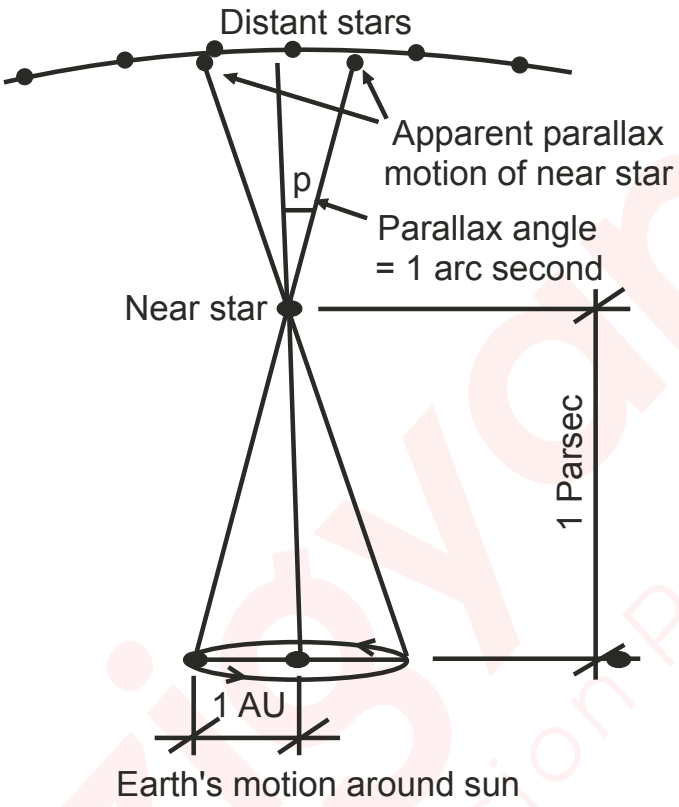

(A) 205625 AU (B) 206265 AU (C) 22620 AU (D) 226265 AU

ANSWER KEY

NSEA 2019 · PAPER CODE 41

80
QUESTIONS · 240 MARKS

IAPT final answer key for paper code 41. ★ marks an answer given as per Zigyan.

1	(A)	2	(A)	3	(A)	4	(B)	5	(B)★
6	(C)	7	(B)	8	(D)	9	(C)	10	(D)
11	(A)	12	(D)★	13	(B)	14	(A)	15	(B)
16	(B)	17	(A)	18	(A)	19	(C)	20	(C)
21	(B)	22	(D)	23	(C)	24	(B)	25	(B)
26	(C)	27	(C)	28	(C)	29	(B)	30	(A)
31	(B)	32	(D)	33	(C)	34	(A)	35	(D)
36	(B)	37	(B)	38	(B)	39	(C)	40	(D)
41	(B)	42	(D)	43	(C)	44	(D)	45	(A)
46	(D)	47	(C)	48	(C)	49	(C)	50	(A)
51	(C)★	52	(D)	53	(B)	54	(A)	55	(B)
56	(C)	57	(B)	58	(A)	59	(D)	60	(D)★
61	(D)	62	(D)	63	(D)	64	(D)	65	(B)
66	(B)	67	(C)	68	(C)	69	(B)	70	(D)
71	(C)	72	(A)	73	(B)	74	(B)	75	(D)★
76	(C)	77	(D)	78	(B)	79	(C)	80	(B)★

★ Answers as per Zigyan

- **Q5** — As per Zigyan: (B); IAPT key (B).
- **Q12** — As per Zigyan: (D); IAPT key (B).
- **Q51** — As per Zigyan: (C); IAPT key (C).
- **Q60** — As per Zigyan: (D); dropped by IAPT.
- **Q75** — As per Zigyan: (D); IAPT key (D).
- **Q80** — As per Zigyan: (B); dropped by IAPT.

zigyan

OLYMPIADS · 2026

Olympiad results



TOP ACHIEVEMENT · CHEMISTRY

Qualified the Chemistry Olympiad twice, and selected for the HBCSE camp.

Saksham Bishnoi reached the national stage of the Chemistry Olympiad in two consecutive years and was selected for the Orientation-cum-Selection Camp at HBCSE, Mumbai. 4 Years Classroom - the same student who took AIR 168 in JEE Advanced 2026.

Qualified twice | HBCSE selection camp | Only student from Faridabad

Above MAS means above the **Minimum Admissible Score**: clearing it puts a student in the national band for their subject. It is a real threshold, not a participation marker.

CHEMISTRY · ABOVE MAS



Sulokya Bibhuty
Class XII
3 Years Classroom
Above MAS



Anay Gupta
Class XI
3 Years Classroom
Above MAS



Akshat Khator
Class XI
3 Years Classroom
Above MAS



Harshit Goyal
Class XII
4 Years Classroom
Above MAS



Hardik Sharma
Class XI
3 Years Classroom
Above MAS



Aarush Kumar
Class XII
1 Year Classroom
Above MAS

PHYSICS · ASTRONOMY · MATHEMATICS

PHYSICS



Sulokya Bibhuty
Class XII
3 Years Classroom
Above MAS

PHYSICS



Saksham Bishnoi
Class XII
4 Years Classroom
Above MAS

ASTRONOMY



Sulokya Bibhuty
Class XI
3 Years Classroom
Above MAS

MATHEMATICS · IOQM



Priyanshi
Class XI
4 Years Classroom
IOQM Qualifier

OLYMPIADS WE PREPARE STUDENTS FOR

NSEP	NSEC	NSEB	NSEA	IOQM	NSEJS
Physics	Chemistry	Biology	Astronomy	Mathematics	Class X and below

The olympiad pathway starts in Class 8.

NSEJS is open to Class 10 and below - the habit of staying with one hard problem is the one JEE Advanced rewards.

Zigyan Eduvision Pvt. Ltd. · SCO No. 107, Sector 16, Faridabad 121002
0129-4048800 · +91 92115 38800 · info@zigyan.com

zigyan

RESULTS · 2021 – 2026

Our toppers, year by year

40
JEE Advanced selections in 6 years

AIR 168
best rank — Saksham Bishnoi, 2026

16 of 35
students selected, JEE Advanced 2026

14 of 35
above 98 percentile, JEE Main 2026

JEE ADVANCED SELECTIONS PER YEAR

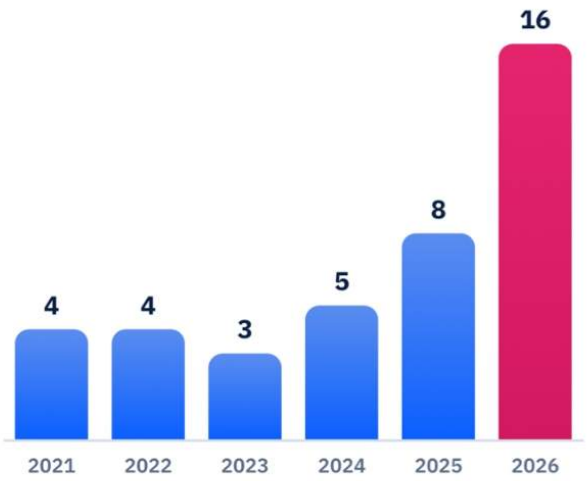

BEST RANK EACH YEAR

YEAR	JEE ADVANCED	JEE MAIN
2026	**Saksham Bishnoi** AIR 168 · 4 Years Classroom	**Saksham Bishnoi** AIR 811 · 99.95 %ile
2025	**Chakshu** AIR 4,233 · 2 Years Classroom	**Chakshu** AIR 8,538 · 99.44 %ile
2024	**Harshit** AIR 777 · 2 Years Classroom	**Harshit** AIR 1,473 · 99.91 %ile
2023	**Aditya Jain** AIR 2,373 · 2 Years Classroom	**Aditya Jain** AIR 2,503 · 99.79 %ile
2022	**Rachit Sharma** AIR 698 · 1 Year Classroom	**Rachit Sharma** AIR 1,016 · 99.90 %ile
2021	**Sparsh Mittal** AIR 2,237 · 1 Year Classroom	**Sparsh Mittal** AIR 1,562

JEE ADVANCED 2026 — THIRTEEN NAMED SELECTIONS



Saksham Bishnoi
AIR 168
4 Years Classroom



Sulokya Bibhuty
AIR 1,315
3 Years Classroom



Aarush
AIR 2,699
1 Year Classroom



Manishka
AIR 2,869
4 Years Classroom



Oojit Kumar
AIR 5,765
4 Years Classroom



Harshit Goyal
AIR 6,407
4 Years Classroom



Pranab Sharma
AIR 6,750
3 Years Classroom



Aditya Dhar
AIR 15,183
3 Years Classroom



Arpit Anshuman
AIR 19,308
4 Years Classroom



Lokesh
AIR 22,857
3 Years Classroom



Arjun
AIR 24,674
3 Years Classroom



Sanyam Gulyani
AIR 25,123
1 Year Classroom



Saket
AIR 27,628
3 Years Classroom

Sixteen students of the 2026 batch were selected in JEE Advanced; the thirteen above are named with their All India Rank.

JEE MAIN 2026 — TOP SIX, WITH PERCENTILE



Saksham Bishnoi
AIR 811
99.95 %ile
4 Years Classroom



Sulokya Bibhuty
AIR 1,095
99.94 %ile
3 Years Classroom



Harshit Goyal
AIR 2,662
99.83 %ile
4 Years Classroom



Manishka
AIR 4,817
99.70 %ile
4 Years Classroom



Oojit Kumar
AIR 5,040
99.69 %ile
4 Years Classroom



Aarush
AIR 5,276
99.67 %ile
1 Year Classroom

14 of the 35 students in the 2026 batch scored above the 98th percentile in JEE Main.

Zigyan Eduvision Pvt. Ltd. · SCO No. 107, Sector 16, Faridabad 121002
0129-4048800 · +91 92115 38800 · info@zigyan.com