zigyan

PREVIOUS YEAR PAPER · 2019

OLYMPIAD · STAGE I

NSEA

National Standard Examination in Astronomy

2019

Question paper, answer key and Zigyan solutions

80	240	120 min	41
Questions	Maximum marks	Time	Paper code

Question paper and official answer key: Indian Association of Physics Teachers (IAPT), NSEA 2019, paper code 41.
Solutions and notes: Zigyan. This booklet is not an IAPT publication.

Prepare for the Olympiads with Zigyan

www.zigyan.com

zigyan

SCO No. 107, Sector 16, Faridabad, Haryana 121002
0129-4048800 · +91 92115 38800 · info@zigyan.com

zigyan

JEE 2026 RESULTS

OUR TOPPERS

When talent meets the right guidance.

Saksham Bishnoi and Sulokya Bibhuty - our JEE 2026 toppers from Zigyan, Sector 16 - with the programme they took and the rank they earned.



Rahul Kaushik Sir
Founder & Director, Zigyan Eduvision
23 years of teaching



Saksham Bishnoi

4 YEARS CLASSROOM

JEE ADVANCED 2026	JEE MAIN 2026
AIR 168	AIR 811
	99.95 percentile



Sulokya Bibhuty

3 YEARS CLASSROOM

JEE ADVANCED 2026	JEE MAIN 2026
AIR 1,315	AIR 1,095
	99.94 percentile

OLYMPIAD RESULTS

Above the Minimum Admissible Score - the national band for the subject

CHEMISTRY

- Sulokya Bibhuty — 3 Years Classroom
- Anay Gupta — 3 Years Classroom
- Akshat Khator — 3 Years Classroom
- Harshit Goyal — 4 Years Classroom
- Hardik Sharma — 3 Years Classroom
- Aarush Kumar — 1 Year Classroom

PHYSICS

- Sulokya Bibhuty — 3 Years Classroom
- Saksham Bishnoi — 4 Years Classroom

ASTRONOMY

- Sulokya Bibhuty — 3 Years Classroom

MATHEMATICS (IOQM)

- Priyanshi — 4 Years Classroom

Saksham Bishnoi qualified the Chemistry Olympiad twice and was selected for the Orientation-cum-Selection Camp at HBCSE, Mumbai.

16 selections	16 of 35	AIR 168
in JEE Advanced 2026	students of the batch selected	best JEE Advanced rank

Start where they started.

Register for ZEST - ₹200 · www.zigyan.com/scholarship/zest

+91 92115 38800
info@zigyan.com

Given in the question paper

Physical constants you may need….

Magnitude of charge on electron $e = 1.60\times10^{-19}$ C	Boiling point of hydrogen = $20.3K$
Mass of electron $m_e = 9.10\times10^{-31}$kg	Boiling point of helium = $4.2K$
Mass of proton $m_p = 1.67\times10^{-27}$kg	Boiling point of nitrogen = $77.4K$
Acceleration due to gravity $g = 9.8$ ms^{-2}	Boiling point of oxygen = $90.19K$
Universal gravitational constant $G = 6.67\times10^{-11}$ Nm^2/Kg^2	Permittivity of free space $\varepsilon_0 = 8.85\times10^{-12}$ C^2 / Nm^2
Universal gas constant $R = 8.31$ J / mol K	Permeability of free space $\mu_0 = 4\pi\times10^{-7}$ H/m
Boltzmann constant $k = 1.38\times10^{-23}$ J / K	Planck's constant $h = 6.62\times10^{-34}$ Js
Stefan's constant $\sigma = 5.67\times10^{-8}$ W / m^{2}K^4	Faraday constant = 96,500C / mol

PART A-1 · ONE CORRECT OPTION

Q. 1 – 80 · +3 for a correct answer, –1 for a wrong one

1. If a and b are the roots of $x^2 - 3x + p = 0$ while c and d are the roots of $x^2 - 12x + q = 0$. Also if a, b, c, d are in GP then the value of $\frac{(q+p)}{(q-p)}$ is

(A) $\frac{17}{15}$ (B) $\frac{19}{16}$

(C) $\frac{35}{32}$ (D) $\frac{9}{8}$

Solution · Q1 **Answer: (A)**

Take the four terms of the GP as a, ar, ar^2, ar^3.

From the sums of the roots:

$$a(1 + r) = 3$$

$$ar^2(1 + r) = 12$$

$$\Rightarrow r^2 = 4$$

From the products of the roots:

$$p = a^2r,\ q = a^2r^5$$

$$\Rightarrow \frac{q}{p} = r^4 = 16$$

$$\therefore \frac{q+p}{q-p} = \frac{16+1}{16-1} = \frac{17}{15}$$

IAPT answer: (A) | **Zigyan answer:** (A)

2. The date on which the Earth is at a minimum distance from the Sun is around

(A) 3 January (B) 4 July (C) 22 June (D) 21 September

Solution · Q2 **Answer: (A)**

The Earth is nearest to the Sun at perihelion, which falls in early January, around 3 January.

IAPT answer: (A) | **Zigyan answer:** (A)

3. The plane of the circular coil is held in the east-west direction. A steady current passed through the coil produces a magnetic field (B) equal to $\sqrt{2}$ times the horizontal component of the earth's magnetic field (B_H) at the place. Now the plane of the coil is rotated carefully through an angle 45^0 about the vertical axis through its diameter. What is the deflection of the needle placed at the centre of the coil with respect to B_H ?

(A) $\tan^{-1}\frac{1}{2}$ (B) $\tan^{-1}\frac{1}{3}$

(C) $\tan^{-1} 2$ (D) $\tan^{-1} 3$

Solution · Q3 **Answer: (A)**

The plane of the coil is east-west, so its field B is north-south; it is taken along B_H.

$$B = \sqrt{2}\ B_H$$

After the rotation, B makes 45° with B_H.

Net component along B_H:

$$B_H + B\cos 45° = 2B_H$$

Component perpendicular to B_H:

$$B\sin 45° = B_H$$

$$\tan\theta = \frac{B_H}{2B_H}$$

$$\Rightarrow \theta = \tan^{-1}\frac{1}{2}$$

IAPT answer: (A) | **Zigyan answer:** (A)

4. If the ratio of the sum of first n terms of two different AP series is (7n + 1) : (4n + 27), the ratio of their 10th term is

(A) $\frac{135}{102}$ (B) $\frac{134}{103}$

(C) $\frac{78}{69}$ (D) $\frac{103}{89}$

Solution · Q4 **Answer: (B)**

Take first terms a_1, a_2 and common differences d_1, d_2.

$$\frac{2a_1 + (n-1)d_1}{2a_2 + (n-1)d_2} = \frac{7n+1}{4n+27}$$

For the ratio of the 10th terms, choose n so that:

$$\frac{n-1}{2} = 9$$

$$\Rightarrow n = 19$$

$$\therefore \frac{a_1 + 9d_1}{a_2 + 9d_2} = \frac{7 \times 19 + 1}{4 \times 19 + 27} = \frac{134}{103}$$

IAPT answer: (B) | **Zigyan answer:** (B)

5. The solution to the set of simultaneous equations with three variables x, y, z

$x + y + z = 5$; $x^2 + y^2 + z^2 = 5$ and $xy + yz + zx = 10$ are

(A) all real
(B) one real, other two complex
(C) two real, one complex
(D) all complex

Solution · Q5 **As per Zigyan: (B)**

$$(x + y + z)^2 = x^2 + y^2 + z^2 + 2(xy + yz + zx)$$

$$25 = 5 + 2 \times 10$$

The third equation follows from the first two, so the data do not fix xyz.

x, y, z are taken as the roots of a cubic with real coefficients, so xyz is a real number k.

$$f(t) = t^3 - 5t^2 + 10t - k = 0$$

Differentiating f(t):

$$f'(t) = 3t^2 - 10t + 10$$

Discriminant of f′(t):

$$100 - 120 < 0$$

So f′(t) is always positive and f(t) is increasing.

∴ One root is real and the other two are complex.

Check: For any real x, the quadratic giving y and z has discriminant $-3x^2 + 10x - 15$, which is always negative, so y and z are complex.

IAPT answer: (B) | **Zigyan answer:** (B)

6. An asteroid's closest approach to the Sun (perihelion) is 2 AU, and farthest distance from the Sun (aphelion) is 4 AU. The period of revolution of the asteroid and the eccentricity of the orbit are respectively

(A) 4.2 Year, 0.40
(B) 4.8 Year, 0.50
(C) 5.2 Year, 0.33
(D) 6.0 Year, 0.20

Solution · Q6 **Answer: (C)**

Semi-major axis:

$$a = \frac{2 + 4}{2} = 3 \text{ AU}$$

By Kepler's third law, with T in years and a in AU:

$$T^2 = a^3$$

$$\Rightarrow T = 3\sqrt{3} \approx 5.2 \text{ yr}$$

Eccentricity:

$$e = \frac{4 - 2}{4 + 2} \approx 0.33$$

IAPT answer: (C) | **Zigyan answer:** (C)

7. A circular coil carrying a definite current ' i ' produces a magnetic field $B_0 = 2.83$ T at the centre 'O' of the coil. The magnetic field produced by the same current at a point ' P ' on the axis of the coil, where the angle OPM as shown in figure is 45^0, is

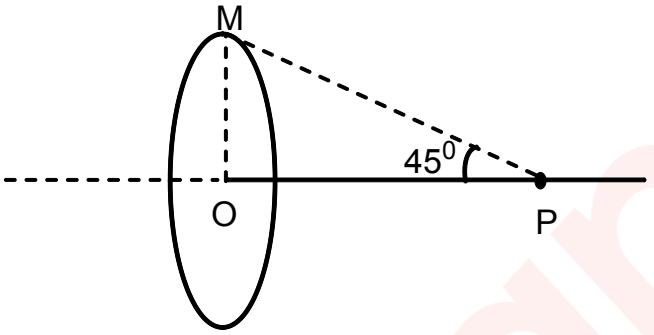

(A) 1.23 T (B) 1.00 T (C) 1.78 T (D) 2.83 T

Solution · Q7 **Answer: (B)**

On the axis, with θ as the angle OPM:

$$\frac{B}{B_0} = \frac{R^3}{\left(R^2 + x^2\right)^{3/2}} = \sin^3\theta$$

$$\Rightarrow B = \frac{2.83}{2\sqrt{2}}$$

$$\Rightarrow B \approx 1.00 \text{ T}$$

IAPT answer: (B) | **Zigyan answer:** (B)

8. A narrow U-tube of uniform cross-section, having a liquid of density 'ρ', is made to move with an acceleration 'a' along the horizontal direction as shown in the figure. What should be the value of 'a' so that the difference in the level in the two arms of the tube is 3 cm ($g = 10 ms^{-2}$)?

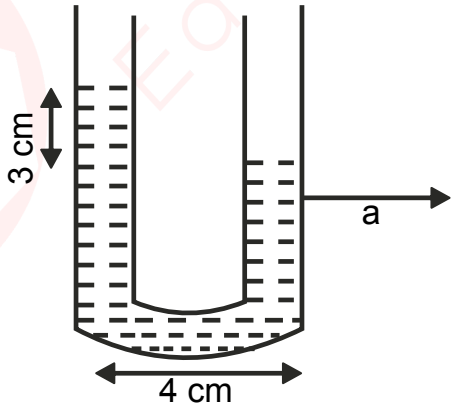

(A) 6.5 ms^{-2} (B) 5.5 ms^{-2} (C) 13.3 ms^{-2} (D) 7.5 ms^{-2}

Solution · Q8 **Answer: (D)**

The liquid levels lie on a line of slope a/g. With level difference h and arm separation L:

$$\frac{h}{L} = \frac{a}{g}$$

$$\Rightarrow a = 10 \times \frac{3}{4}$$

$$\Rightarrow a = 7.5 \text{ m s}^{-2}$$

IAPT answer: (D) | **Zigyan answer:** (D)

9. The value of $4\sin 50^0 - \sqrt{3}\ \tan 50^0$ is

(A) −2 (B) −1

(C) 1 (D) $\sqrt{3}$

Solution · Q9 **Answer: (C)**

Put everything over cos 50°:

$$\frac{4\sin 50^\circ \cos 50^\circ - \sqrt{3}\ \sin 50^\circ}{\cos 50^\circ}$$

$$= \frac{2\sin 100^\circ - 2\sin 60^\circ \sin 50^\circ}{\cos 50^\circ}$$

Numerator:

2 cos 10° − (cos 10° − cos 110°)

$$= \cos 10^\circ - \cos 70^\circ$$

$$= 2 \sin 40^\circ \sin 30^\circ$$

$$= \cos 50^\circ$$

∴ The value of the expression is 1.

IAPT answer: (C) | **Zigyan answer:** (C)

10. The value of $Z = \cos 10^0 \cos 30^0 \cos 50^0 \cos 70^0$ is

(A) $\frac{3}{8}$ (B) $\frac{5}{16}$

(C) $\frac{5}{8}$ (D) $\frac{3}{16}$

Solution · Q10 **Answer: (D)**

Use the product identity for cosines:

$$\cos\theta\cos(60^\circ - \theta)\cos(60^\circ + \theta) = \frac{1}{4}\cos 3\theta$$

$$\theta = 10^\circ$$

$$\Rightarrow \cos 10^\circ \cos 50^\circ \cos 70^\circ = \frac{1}{4}\cos 30^\circ$$

$$\Rightarrow Z = \frac{1}{4}\cos^2 30^\circ = \frac{3}{16}$$

IAPT answer: (D) | **Zigyan answer:** (D)

11. The number of times a 5th magnitude star is brighter than an 8th magnitude star is

(A) 15.85 (B) 3 (C) 20 (D) 6.4

Solution · Q11 **Answer: (A)**

A difference of 5 magnitudes means a brightness ratio of 100.

$$\frac{b_5}{b_8} = 100^{3/5} = 10^{1.2}$$

$$\Rightarrow \frac{b_5}{b_8} \approx 15.85$$

IAPT answer: (A) | **Zigyan answer:** (A)

12. A uniform gravitational field (E) exists in a certain region of space. Consider two parallel planes perpendicular to the field E as shown in the figure. Three statements are given below

(i) Work done by the force in moving a particle of mass m from point A to B is $\frac{1}{2}mEd$

(ii) Work done in moving a particle from point B to D is zero

(iii) Work done in moving a particle from A to D is $\frac{\sqrt{3}}{2}mEd$

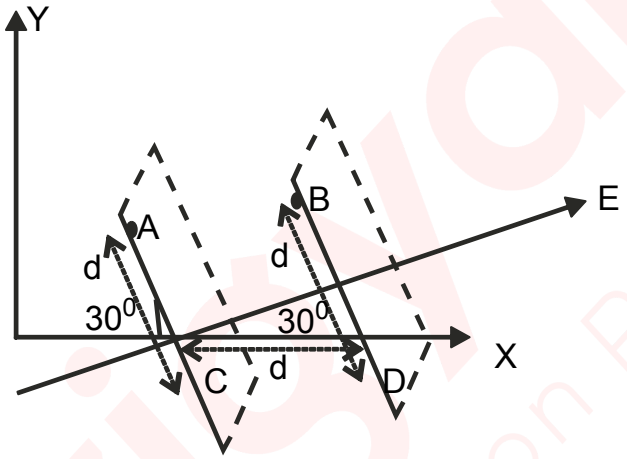

Choose the correct statement (s)

(A) (i), (ii) and (iii)
(B) (i) and (ii) only
(C) (i) only
(D) (ii) and (iii) only

Solution · Q12 **As per Zigyan: (D)**

Each plane is perpendicular to the field, so it is an equipotential surface.

E makes 30° with the X-axis, along which CD (length d) lies. Separation of the planes along E:

$$s = d\cos 30°$$

From A to B:

$$W_{AB} = mEs = \frac{\sqrt{3}}{2}mEd$$

So (i) is false.

B and D lie on the same plane:

$$W_{BD} = 0$$

So (ii) is true.

$$W_{AD} = W_{AB} = \frac{\sqrt{3}}{2}mEd$$

So (iii) is true.

Why Zigyan differs from IAPT: no work is done from B to D, so the work from A to D equals that from A to B. The 30° between E and CD makes both mEd cos 30°, so (i), which gives mEd/2, is false while (iii) is true.

Reference: NCERT Physics Class XI (Part I), Chapter 5 'Work, Energy and Power', section 5.3 'Work': only the force component along the displacement does work, so no work is done when force and displacement are mutually perpendicular.

IAPT answer: (B) | **Zigyan answer:** (D)

13. A ball is projected with a speed of $10\sqrt{3}$ ms^{-1} at angle of 60^0 from the foot of a wedge as shown in the figure. The wedge also starts moving horizontally with a speed of $10\sqrt{3}$ ms^{-1}. The time after which the ball hits the inclined surface of the wedge is

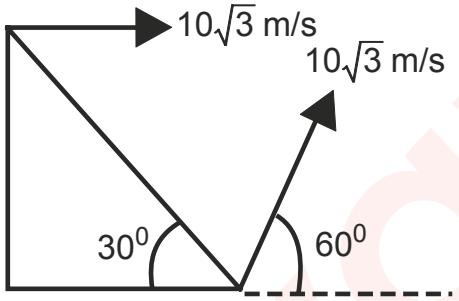

Physical constants you may need....

Acceleration due to gravity g = 9.8 ms^{-2}

(A) $\sqrt{2}$ s
(B) 2 s
(C) $\sqrt{3}$ s
(D) 3 s

Solution · Q13 **Answer: (B)**

Velocity of the ball relative to the wedge:

$$u_x = 10\sqrt{3}\cos 60° - 10\sqrt{3} = -5\sqrt{3} \text{ ms}^{-1}$$

$$u_y = 10\sqrt{3}\sin 60° = 15 \text{ ms}^{-1}$$

$$\Rightarrow u = 10\sqrt{3} \text{ ms}^{-1}$$

This velocity is inclined at 30° to the face of the wedge.

Time of flight on the incline:

$$T = \frac{2u\sin 30°}{g\cos 30°} = \frac{20}{g}$$

$$\Rightarrow T = 2.04 \text{ s} \approx 2 \text{ s}$$

IAPT answer: (B) | **Zigyan answer:** (B)

14. In the previous question (number 13), what should be the velocity of the wedge so that the ball hits the incline perpendicular to it

Question 13: A ball is projected with a speed of $10\sqrt{3}$ ms^{-1} at angle of 60^0 from the foot of a wedge as shown in the figure. The wedge also starts moving horizontally with a speed of $10\sqrt{3}$ ms^{-1}.

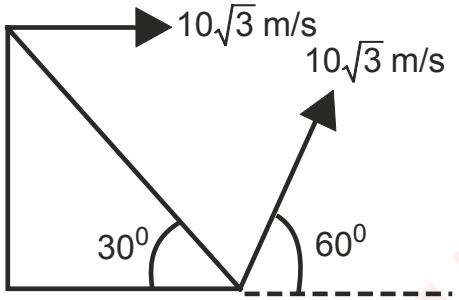

(A) $8\sqrt{3}$ ms^{-1} in the same direction

(B) $5\sqrt{3}$ ms^{-1} in the opposite direction

(C) $16\sqrt{3}$ ms^{-1} in the same direction

(D) $15\sqrt{3}$ ms^{-1} in the opposite direction

Solution · Q14 **Answer: (A)**

Let the wedge move forward with speed V. The ball's velocity over the ground is perpendicular to the incline.

Relative velocity up along the incline, and normal to it:

$$u_t = V\cos 30°$$

$$u_n = 10\sqrt{3} - V\sin 30°$$

For perpendicular impact, the velocity along the incline is zero on hitting.

$$T = \frac{u_t}{g\sin 30°} = \frac{\sqrt{3}\,V}{g}$$

Time to return to the incline:

$$T = \frac{2u_n}{g\cos 30°} = \frac{40\sqrt{3} - 2V}{\sqrt{3}\,g}$$

$$\Rightarrow 3V = 40\sqrt{3} - 2V$$

$$\Rightarrow V = 8\sqrt{3} \text{ ms}^{-1}$$

It is positive, so the wedge moves in the same direction.

IAPT answer: (A) | **Zigyan answer:** (A)

15. If 'p' is the perpendicular distance from the origin to the straight line $x\cos\theta - y\sin\theta = k\cos 2\theta$ and 'q' is the corresponding distance to the straight line $x\sec\theta - y\,\text{cosec}\,\theta = k$, then the value of $p^2 + 4q^2$ is

(A) $2k^2$ (B) k^2 (C) $4k^2$ (D) $3k^2$

Solution · Q15 **Answer: (B)**

$$p = \frac{|k\cos 2\theta|}{\sqrt{\cos^2\theta + \sin^2\theta}}$$

$$\Rightarrow p^2 = k^2\cos^2 2\theta$$

$$q = \frac{|k|}{\sqrt{\sec^2\theta + \text{cosec}^2\theta}} = |k\sin\theta\cos\theta|$$

$$\Rightarrow 4q^2 = k^2 \sin^2 2\theta$$

$$\therefore p^2 + 4q^2 = k^2$$

IAPT answer: (B) | **Zigyan answer:** (B)

16. If $\vec{a}$ and $\vec{b}$ are unit vectors and θ is the angle between $\vec{a}$ and $\vec{b}$ then $\sin\frac{\theta}{2}$ is equal to

(A) 1

(B) $\frac{1}{2}\left|\vec{a} - \vec{b}\right|$

(C) 0

(D) $\frac{1}{2}\left|\vec{a} + \vec{b}\right|$

Solution · Q16 **Answer: (B)**

$$\left|\vec{a} - \vec{b}\right|^2 = 1 + 1 - 2\cos\theta$$

$$\Rightarrow \left|\vec{a} - \vec{b}\right|^2 = 4\sin^2\frac{\theta}{2}$$

$$\therefore \sin\frac{\theta}{2} = \frac{1}{2}\left|\vec{a} - \vec{b}\right|$$

IAPT answer: (B) | **Zigyan answer:** (B)

17. Which of the following statement is true for Saturn and Jupiter?

(A) both rotate faster than the Earth

(B) both rotate slower than the Earth

(C) only one rotates rapidly while the other rotates very slowly compared to Earth

(D) their periods of rotation are linked to their period of revolution

Solution · Q17 **Answer: (A)**

Jupiter spins once in about 10 hours and Saturn in about 10.7 hours, while the Earth takes about 24 hours. So both rotate faster than the Earth.

IAPT answer: (A) | **Zigyan answer:** (A)

18. In which of the following cases friction cannot be zero for the disc having pure rolling?

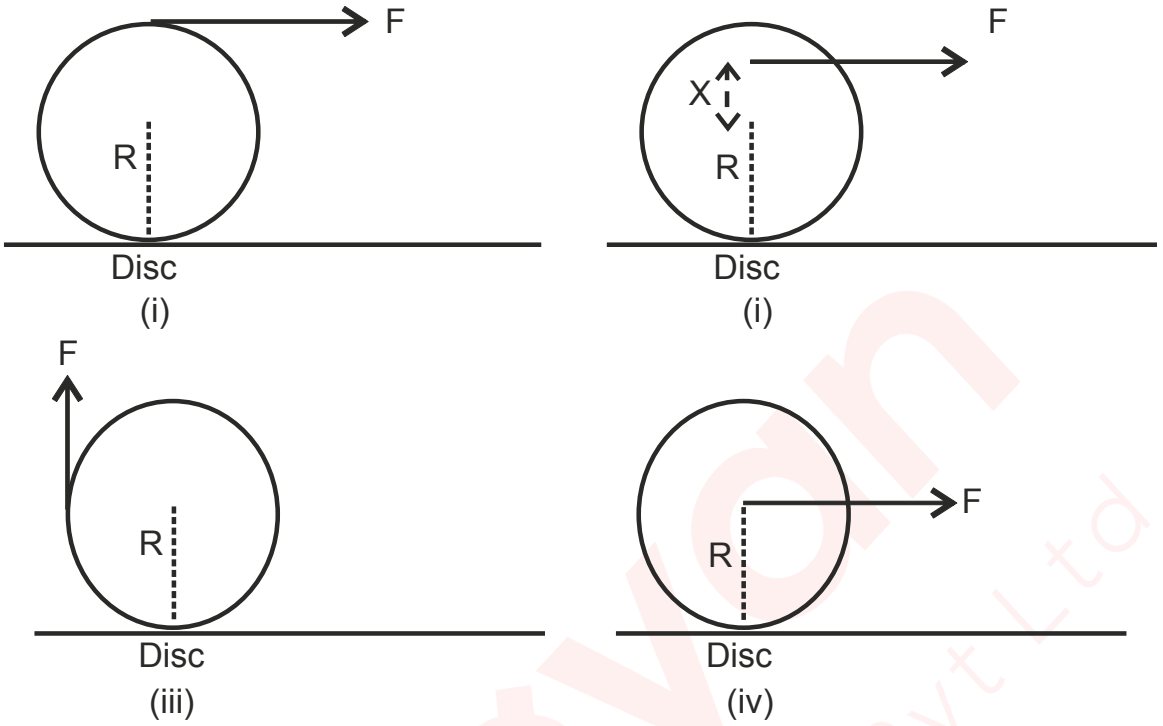

(A) (i), (iii) and (iv)
(B) (i) and (ii) only
(C) (i), (ii), (iii) and (iv)
(D) (i), (ii) and (iii)

Solution · Q18 **Answer: (A)**

The second figure, also printed as (i), is case (ii).

Take a horizontal force F at height x above the centre, with friction f forward.

$$F + f = ma$$

$$Fx - fR = \frac{mR^2}{2} \times \frac{a}{R}$$

$$\Rightarrow f = \frac{F(2x - R)}{3R}$$

In case (i), x is equal to R:

$$f = F/3$$

In case (iv), x is zero:

$$f = -F/3$$

In case (ii), x is the length X, so friction vanishes for this value:

$$X = \frac{R}{2}$$

In case (iii), F is vertical:

$$f = ma$$

$$(F - f)R = \frac{mR^2}{2} \times \frac{a}{R}$$

$$\Rightarrow f = \frac{2F}{3}$$

So friction cannot be zero in (i), (iii) and (iv).

IAPT answer: (A) | **Zigyan answer:** (A)

19. A and B are two locations 120 m apart with a 40 m tall wall midway between them. The minimum velocity and the corpresponding angle at which a ball be projected from A so as just to clear the wall and strike at B are

Physical constants you may need....

Acceleration due to gravity g = 9.8 ms^{-2}

(A) 28.63 ms^{-1} and 53^0

(B) 28.63 ms^{-1} and 37^0

(C) 35.06 ms^{-1} and 53^0

(D) 28.28 ms^{-1} and 37^0

Solution · Q19 **Answer: (C)**

With a range of 120 m, the maximum height must be at least 40 m to clear the wall.

The speed is least when the top of the path just touches the wall.

$$\frac{R\tan\theta}{4} = 40$$

$$\Rightarrow \tan\theta = \frac{4}{3}$$

$$\Rightarrow \theta \approx 53°$$

$$u^2 = \frac{gR}{\sin 2\theta} = \frac{9.8 \times 120}{0.96} = 1225$$

$$\Rightarrow u = 35\ ms^{-1}$$

The nearest option is 35.06 ms^{-1} at 53°.

IAPT answer: (C) | **Zigyan answer:** (C)

20. The argument [arg(z)] of the complex number $z = \left(-\frac{1}{2} + i\frac{\sqrt{3}}{2}\right)$ is

(A) $\frac{\pi}{6}$

(B) $\frac{\pi}{3}$

(C) $\frac{2\pi}{3}$

(D) $\frac{4\pi}{3}$

Solution · Q20 **Answer: (C)**

z lies in the second quadrant.

$$\arg(z) = \pi - \tan^{-1}\sqrt{3}$$

$$\Rightarrow \arg(z) = \pi - \frac{\pi}{3} = \frac{2\pi}{3}$$

IAPT answer: (C) | **Zigyan answer:** (C)

21. The eccentricity of the ellipse represented by $4x^2 + 9y^2 - 16x = 20$ is

(A) $\frac{3}{5}$ (B) $\frac{\sqrt{5}}{3}$

(C) $\frac{\sqrt{3}}{5}$ (D) $\frac{1}{2}$

Solution · Q21 **Answer: (B)**

$$4(x-2)^2 + 9y^2 = 36$$

$$\Rightarrow \frac{(x-2)^2}{9} + \frac{y^2}{4} = 1$$

$$\Rightarrow a^2 = 9,\ b^2 = 4$$

$$e = \sqrt{1 - \frac{4}{9}} = \frac{\sqrt{5}}{3}$$

IAPT answer: (B) | **Zigyan answer:** (B)

22. Which of the following is TRUE for Retrograde motion (apparent motion of planets in a direction opposite to the normal)?

(A) caused by epicycles

(B) undergone only by superior planets

(C) undergone only by inferior planets

(D) an effect due to the projection of planet's orbit onto the sky

Solution · Q22 **Answer: (D)**

A planet never reverses its orbital motion. When the Earth overtakes an outer planet, or an inner planet overtakes the Earth, the planet only appears to move backwards against the stars.

So both inferior and superior planets show it. Epicycles were only a device of the Earth-centred model; the motion is a projection effect.

IAPT answer: (D) | **Zigyan answer:** (D)

23. A proton and a deuteron are projected into a uniform magnetic field with velocities 50×10^6 ms^{-1} and 43.3×10^6 ms^{-1} at angles 30^0 and 60^0 respectively with respect to the direction of the magnetic field. Compare the respective pitch of their helical paths.

(A) 1:2 (B) 2:1 (C) 1:1 (D) 4:1

Solution · Q23 **Answer: (C)**

Pitch of the helix:

$$P = v\cos\theta \times \frac{2\pi m}{qB}$$

Both particles have the same charge, and the deuteron has twice the mass of the proton.

$$\frac{P_1}{P_2} = \frac{50\cos 30^\circ \times 1}{43.3\cos 60^\circ \times 2}$$

$$\Rightarrow \frac{P_1}{P_2} = \frac{43.3}{43.3} = \frac{1}{1}$$

IAPT answer: (C) | **Zigyan answer:** (C)

24. In a time of 4.606 days a radioactive sample loses $\left(\frac{4}{5}\right)^{th}$ of the amount present initially. The mean life of the sample is

(A) 2.2 day (B) 2.86 day (C) 2.46 day (D) 2.95 day

Solution · Q24 **Answer: (B)**

Fraction of the sample left:

$$\frac{N}{N_0} = 1 - \frac{4}{5} = \frac{1}{5}$$

$$\Rightarrow e^{-t/\tau} = 1/5$$

$$\Rightarrow \tau = \frac{t}{\ln 5} = \frac{4.606}{1.609}$$

$$\Rightarrow \tau = 2.86 \text{ d}$$

IAPT answer: (B) | **Zigyan answer:** (B)

25. Assuming radius of the earth to be 6400 Km, the distance to the horizon visible from a 180 m tall building is close to

(A) 56 Km (B) 48 Km (C) 90 Km (D) 64 Km

Solution · Q25 **Answer: (B)**

The line of sight touches the earth at the horizon, so it is perpendicular to the radius there.

$$d^2 = (R + h)^2 - R^2 \approx 2Rh$$

$$R = 6400 \text{ km}, h = 0.18 \text{ km}$$

$$d \approx \sqrt{2 \times 6400 \times 0.18} \text{ km}$$

$$\Rightarrow d = \sqrt{2304} \text{ km}$$

$$\therefore d = 48 \text{ km}$$

IAPT answer: (B) | **Zigyan answer:** (B)

26. Since none of the six trigonometric functions are one-to-one, they are restricted in order to have their unambiguous inverse functions. This range of the inverse trigonometric functions is called the range of the principal values. Range of principal value of $\cot^{-1}(x)$ is

(A) $-\frac{\pi}{2}$ to $+\frac{\pi}{2}$

(B) $-\pi$ to $+\pi$

(C) 0 to π

(D) $-\frac{\pi}{2}$ to 0 or 0 to $\frac{\pi}{2}$

Solution · Q26 **Answer: (C)**

cot x is one-one on the interval from 0 to π (end points excluded) and takes every real value there.

This interval is therefore taken as the principal value branch.

$\cot^{-1} : R \rightarrow (0, \pi)$

IAPT answer: (C) | **Zigyan answer:** (C)

27. On which of the following planets would the Sun rise in the west?

(A) Saturn (B) Mercury (C) Venus (D) Jupiter

Solution · Q27 **Answer: (C)**

Venus spins about its axis in the sense opposite to that of the Earth (retrograde rotation).

So on Venus the Sun rises in the west and sets in the east.

IAPT answer: (C) | **Zigyan answer:** (C)

28. A prism of refracting angle 60^0 is made of a material of refractive index 1.732. The angle of minimum deviation produced by this prism is close to

(A) 30^0 (B) 38^0 (C) 60^0 (D) 45^0

Solution · Q28 **Answer: (C)**

At minimum deviation,

$$\mu = \frac{\sin\left[\frac{A+\delta_m}{2}\right]}{\sin\left(\frac{A}{2}\right)}$$

$$\Rightarrow \sin\left[\frac{60^\circ + \delta_m}{2}\right] = 1.732 \times 0.5 = 0.866$$

$$\Rightarrow \frac{60^\circ + \delta_m}{2} = 60^\circ$$

$$\therefore \delta_m = 60^\circ$$

IAPT answer: (C) | **Zigyan answer:** (C)

29. Two particles undergo simple harmonic motion given by $y_1 = a \sin 50\pi t$ and $y_2 = a \sin 40\pi t$ respectively. Initially the particles are in phase. After what minimum time will the particles be in phase again?

(A) 0.1 s (B) 0.2 s (C) 0.25 s (D) 0.15 s

Solution · Q29 **Answer: (B)**

The phase difference between the two motions is

$$\Delta\phi = 50\pi t - 40\pi t = 10\pi t$$

They are first in phase again when it becomes one full cycle.

$$10\pi t = 2\pi$$

$$\Rightarrow t = 0.2 \text{ s}$$

IAPT answer: (B) | **Zigyan answer:** (B)

30. Bisectors of vertex angles A, B and C of a triangle ABC intersect its circum-circle at the points D, E and F respectively. The angle EDF is equal to

(A) $90^o - A/2$ (B) $45^o + A/2$ (C) $90^o - B/2$ (D) A

Solution · Q30 **Answer: (A)**

AD, BE and CF bisect the angles of the triangle.

Angles in the same segment, on chords AE and AF:

$$\angle ADE = \angle ABE = B/2$$

$$\angle ADF = \angle ACF = C/2$$

$$\Rightarrow \angle EDF = \angle ADE + \angle ADF = (B + C)/2$$

$$\therefore \angle EDF = (180° - A)/2 = 90° - A/2$$

IAPT answer: (A) | **Zigyan answer:** (A)

31. Δ ABC is right angled at B. A square is constructed on the side AC opposite to that of angle B. P is the centre of this square. The angle PBC is equal to

(A) 30° (B) 45°

(C) 60° (D) None of the above

Solution · Q31 **Answer: (B)**

The diagonals of a square are perpendicular and bisect its right angles.

$$\angle APC = 90°, \angle PAC = 45°$$

For the opposite angles at B and P,

$$\angle ABC + \angle APC = 180°$$

So A, B, C and P lie on one circle.

Angles in the same segment, on chord PC:

$$\angle PBC = \angle PAC = 45°$$

IAPT answer: (B) | **Zigyan answer:** (B)

32. A line through the three stars in Orion's belt appears to point towards which one of the following star?

(A) Vega (B) Polaris (C) Rigel (D) Sirius

Solution · Q32 **Answer: (D)**

The three belt stars of Orion lie almost in a straight line.

Extended towards the south-east, this line points to Sirius, the brightest star of the night sky.

In the opposite direction it points towards Aldebaran.

IAPT answer: (D) | **Zigyan answer:** (D)

33. In an experiment on photoelectric effect, the maximum speed of photoelectron (v_{max}) is measured for different frequencies (f) of incident radiation. On a graph of v_{max} versus f, the slope of the curve at any point gives

(A) Planck's constant (h)

(B) Planck's constant divided by electron charge (h/e)

(C) de-Broglie wavelength of the photoelectron

(D) Wavelength of incident radiation

Solution · Q33 **Answer: (C)**

By Einstein's photoelectric equation, with work function ϕ,

$$\frac{1}{2}mv_{max}^2 = hf - \varphi$$

Differentiating with respect to f,

$$mv_{max}\frac{dv_{max}}{df} = h$$

$$\Rightarrow \frac{dv_{max}}{df} = \frac{h}{mv_{max}}$$

The right side is Planck's constant divided by momentum, that is, the de Broglie wavelength of the fastest photoelectron.

IAPT answer: (C) | **Zigyan answer:** (C)

34. A dielectric slab of constant $\varepsilon_r = 2$ is inserted into a parallel plate capacitor as shown in the figure. The spring attached to the slab can set the slab into oscillation of frequency ω. At equilibrium, end of the slab is at the middle of the plates. If the slab is pulled till the entire slab is inside the capacitor and allowed to oscillate, the current flowing through the circuit is

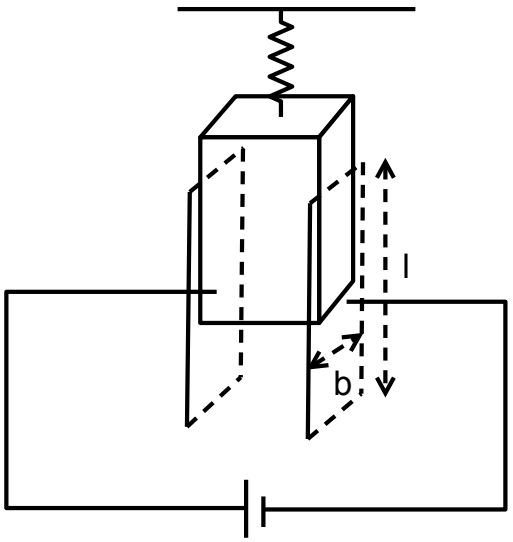

(A) $-\frac{b\varepsilon_0 V\omega\ell}{2d}\sin(\omega t)$

(B) $+\frac{b\varepsilon_0 V\omega\ell}{2d}\cos(\omega t)$

(C) $-\frac{b\varepsilon_0 V\omega\ell}{2d}\sin^2(\omega t)$

(D) $-\frac{b\varepsilon_0 V\omega\ell}{2d}\cos^2(\omega t)$

Solution · Q34 **Answer: (A)**

Plates: length ℓ, width b, separation d, battery V. The slab is also of length ℓ and fills the gap.

With a length x of the slab between the plates,

$$C = \frac{\varepsilon_0 b}{d}[2x + (\ell - x)] = \frac{\varepsilon_0 b(\ell + x)}{d}$$

The slab starts fully inside and oscillates about the half-inserted position, so its amplitude is half of ℓ.

$$x = \frac{\ell}{2} + \frac{\ell}{2}\cos(\omega t)$$

The current is the rate of change of charge.

$$i = V\frac{dC}{dt} = \frac{\varepsilon_0 bV}{d}\frac{dx}{dt}$$

$$\therefore i = -\frac{b\varepsilon_0 V\omega\ell}{2d}\sin(\omega t)$$

IAPT answer: (A) | **Zigyan answer:** (A)

35. If a, b, c are in G.P. and $\log_c a$, $\log_b c$ and $\log_a b$ are in A.P., the common difference of the A.P. is

(A) $\frac{1}{2}$ (B) $\frac{2}{3}$

(C) 1 (D) $\frac{3}{2}$

Solution · Q35 **Answer: (D)**

For the G.P.,

$$2\log b = \log a + \log c$$

Call the middle term p.

$$p = \log_b c$$

Then the first and third terms are

$$\log_c a = \frac{2}{p} - 1$$

$$\log_a b = \frac{1}{2 - p}$$

For the A.P.,

$$2p = \frac{2}{p} - 1 + \frac{1}{2 - p}$$

$$\Rightarrow 2p^3 - 3p^2 - 3p + 4 = 0$$

$$\Rightarrow (p - 1)(2p^2 - p - 4) = 0$$

The first factor makes a, b, c equal, so take the second.

$$\Rightarrow p - \frac{2}{p} = \frac{1}{2}$$

The common difference is

$$p - \left(\frac{2}{p} - 1\right) = \frac{3}{2}$$

IAPT answer: (D) | **Zigyan answer:** (D)

36. ABCD is a line segment trisected by the points B and C while P is any point on the circle whose diameter is BC. If angles APB and CPD are α and β respectively, the value of tanα × tan β is

(A) $\frac{1}{2}$ (B) $\frac{1}{4}$

(C) $\frac{3}{8}$ (D) $\frac{3}{2}$

Solution · Q36 **Answer: (B)**

P lies on the circle with diameter BC.

$$\angle BPC = 90°$$

Draw AQ parallel to CP, meeting PB produced at Q. As B is the midpoint of AC, triangles ABQ and CBP are congruent.

$$AQ = CP,\ BQ = BP$$

$$\angle AQP = 90°$$

$$\Rightarrow \tan\alpha = \frac{AQ}{PQ} = \frac{CP}{2BP}$$

Similarly, with C the midpoint of BD,

$$\tan\beta = \frac{BP}{2CP}$$

$$\therefore \tan\alpha \times \tan\beta = \frac{1}{4}$$

IAPT answer: (B) | **Zigyan answer:** (B)

37. A particle is projected with a velocity 20 ms^{-1}, at angle of 60° to the horizontal. Then radius of curvature of its trajectory at a point where its velocity makes an angle of 37° with the horizontal is close to (g = 10 ms^{-2})

(A) 16 m (B) 19.53 m (C) 15.52 m (D) 25 m

Solution · Q37 **Answer: (B)**

The horizontal component of velocity stays constant.

$$v \cos 37° = 20 \cos 60°$$

$$\Rightarrow v = 12.5\ m\ s^{-1}$$

The normal acceleration at that point is g cos 37°, with cos 37° taken as 0.8.

$$R = \frac{v^2}{g\cos 37°}$$

$$\Rightarrow R = \frac{(12.5)^2}{10 \times 0.8} \approx 19.53\ m$$

IAPT answer: (B) | **Zigyan answer:** (B)

38. A body is thrown up in a lift with a velocity u relative to moving lift and its time of flight is t. The acceleration with which the lift is moving will be

(A) $\frac{u^2}{t} - g$

(B) $\frac{2u}{t} - g$

(C) $\frac{2u}{t}$

(D) none

Solution · Q38 **Answer: (B)**

Let the lift accelerate upwards with acceleration a.

In the frame of the lift, the downward acceleration of the body is g + a.

Time of flight:

$$t = \frac{2u}{g + a}$$

$$\Rightarrow a = \frac{2u}{t} - g$$

IAPT answer: (B) | **Zigyan answer:** (B)

39. A particle of mass m, initially at rest, is acted upon by a variable force F for a brief interval of time T. It begins to move with a velocity u just after the force stops acting. F, as a function of time, is shown in the graph. The value of u is

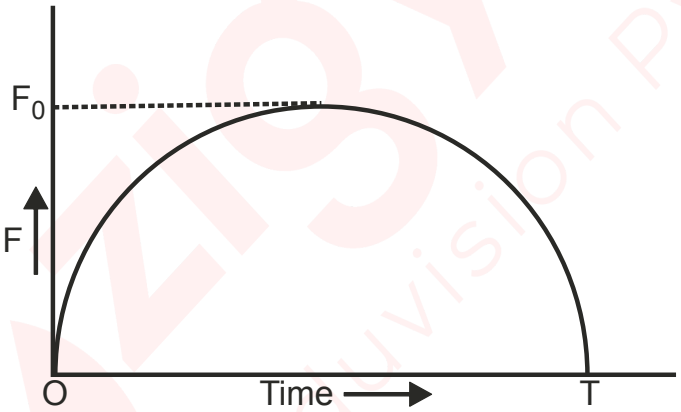

(A) $u = \frac{\pi F_0^2}{2m}$

(B) $u = \frac{\pi T^2}{8m}$

(C) $u = \frac{\pi F_0 T}{4m}$

(D) $u = \frac{F_0 T}{2m}$

Solution · Q39 **Answer: (C)**

The impulse equals the area under the F–t graph.

The curve is half of an ellipse (drawn as a semicircle), with semi-axes T/2 and F_0.

$$mu = \frac{1}{2} \times \pi \times \frac{T}{2} \times F_0$$

$$\Rightarrow u = \frac{\pi F_0 T}{4m}$$

IAPT answer: (C) | **Zigyan answer:** (C)

40. If the product of two roots of the equation $x^4 - 11x^3 + kx^2 + 269x - 2001 = 0$ is -69, the value of k is

(A) 10 (B) 1 (C) -5 (D) -10

Solution · Q40 **Answer: (D)**

The product of all four roots is -2001, so the other two roots have product 29.

Hence the polynomial splits as

$(x^2 + ax - 69)(x^2 + bx + 29)$

Comparing the coefficients of x^3 and x:

$$a + b = -11$$

$$29a - 69b = 269$$

$$\Rightarrow a = -5, b = -6$$

Comparing the coefficients of x^2:

$$k = 29 - 69 + ab$$

$$\Rightarrow k = -10$$

IAPT answer: (D) | **Zigyan answer:** (D)

41. By a chord of the curve $y = x^3$ we mean any line joining two points on it. The number of chords which have slope -1 is

(A) Infinite (B) 0 (C) 1 (D) 2

Solution · Q41 **Answer: (B)**

Let two distinct points of the curve have abscissae p and q.

Slope of the chord:

$$m = \frac{p^3 - q^3}{p - q} = p^2 + pq + q^2$$

$$\Rightarrow m = \left(p + \frac{q}{2}\right)^2 + \frac{3q^2}{4} > 0$$

So no chord can have slope -1.

The number of such chords is zero.

IAPT answer: (B) | **Zigyan answer:** (B)

42. The universe is estimated to be between ten and twenty billion years old. This estimate is based on the value of the constant(s)

(A) Speed of light (B) Fine structure constant
(C) Planck constant (D) Hubble constant

Solution · Q42 **Answer: (D)**

By Hubble's law, the recession speed of a galaxy at distance d is

$$v = H_0 d$$

For a steady expansion, the time since it began is about

$$t = \frac{d}{v} = \frac{1}{H_0}$$

So the age of the universe is estimated from the Hubble constant.

IAPT answer: (D) | **Zigyan answer:** (D)

43. Consider the charge configuration and a spherical Gaussian surface as shown in the figure. While calculating the flux of the electric field over any part of the spherical surface the electric field will be due to

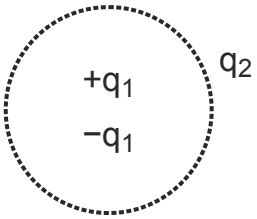

(A) q_2

(B) Only the positive charges

(C) All the charges

(D) $+q_1$ and $-q_1$

Solution · Q43 **Answer: (C)**

By Gauss's law, the net flux through the closed surface depends only on the enclosed charge.

The electric field at each point of the surface, however, is the resultant of the fields of all the charges, inside as well as outside.

The flux over any part of the surface is found from this resultant field, to which $+q_1$, $-q_1$ and q_2 all contribute.

IAPT answer: (C) | **Zigyan answer:** (C)

44. The expression for electric potential at any point due to an electric dipole ($\vec{p}$) is (with usual notation)

(A) $k\frac{\vec{p}\times\vec{r}}{r^2}$

(B) $k\frac{\vec{p}\times\vec{r}}{r^3}$

(C) $k\frac{\vec{p}\cdot\vec{r}}{r^2}$

(D) $k\frac{\vec{p}\cdot\vec{r}}{r^3}$

Solution · Q44 **Answer: (D)**

For a short dipole, at a distance r and at an angle θ to the dipole moment:

$$V = \frac{kp\cos\theta}{r^2}$$

Using the dot product of the dipole moment and the position vector:

$$\vec{p}\cdot\vec{r} = pr\cos\theta$$

$$\Rightarrow V = k\frac{\vec{p}\cdot\vec{r}}{r^3}$$

IAPT answer: (D) | **Zigyan answer:** (D)

45. A function f (n) is defined by $f(n) = \frac{4^n - 4^{-n}}{4^n + 4^{-n}}$ for every integer n.

If p and q are integers such that p > q, the sign of f (p) – f (q) is

(A) Positive (B) Negative (C) Indeterminate (D) zero

Solution · Q45 **Answer: (A)**

Multiply the numerator and the denominator by 4^n.

$$f(n) = \frac{16^n - 1}{16^n + 1} = 1 - \frac{2}{16^n + 1}$$

The subtracted fraction decreases as n increases, so f is strictly increasing.

$$p > q \Rightarrow f(p) - f(q) > 0$$

So the sign is positive.

IAPT answer: (A) | **Zigyan answer:** (A)

46. The first term of a descending A.P. series of 4 distinct positive integers with greatest possible last term and sum 2004 is

(A) 552 (B) 536 (C) 512 (D) 504

Solution · Q46 **Answer: (D)**

Let the last term be L and let the terms decrease by d, a positive integer.

The terms are L + 3d, L + 2d, L + d and L.

$$4L + 6d = 2004$$

$$\Rightarrow L = 501 - \frac{3d}{2}$$

L is greatest for the smallest d that makes it an integer, which is 2.

$$\Rightarrow L = 498$$

First term:

$$L + 3d = 504$$

IAPT answer: (D) | **Zigyan answer:** (D)

47. If the Earth is made to rotate in the opposite sense (clockwise rather than counterclockwise), the length of a solar day will be

(A) 23 hr 56 min (B) 24 hr (C) 23 hr 52 min (D) 24 hr 4 min

Solution · Q47 **Answer: (C)**

The sidereal day, the true spin period, is about 23 h 56 min and does not change.

At present, spin and orbital motion are in the same sense, so the solar day is about 4 min longer than this.

With the spin reversed, the solar day becomes about 4 min shorter than the sidereal day.

New length of the solar day:

$$23 \text{ h } 56 \text{ min} - 4 \text{ min} = 23 \text{ h } 52 \text{ min}$$

IAPT answer: (C) | **Zigyan answer:** (C)

48. In the case of a diatomic gas, the ratio of the heat used in doing work for expansion of the gas to the total heat given to it at constant pressure is

(A) $\frac{2}{5}$ (B) $\frac{3}{7}$

(C) $\frac{2}{7}$ (D) $\frac{5}{7}$

Solution · Q48 **Answer: (C)**

At constant pressure:

$$Q = nC_P\Delta T$$

$$W = nR\Delta T$$

For a diatomic gas with no vibration:

$$C_P = \frac{7R}{2}$$

$$\Rightarrow \frac{W}{Q} = \frac{R}{C_P} = \frac{2}{7}$$

IAPT answer: (C) | **Zigyan answer:** (C)

49. Water coming out of the mouth of a tap and falling vertically in streamline flow forms a tapering column, i.e., the area of cross-section of the liquid column goes on decreasing as it moves down, the most accurate explanation for this is

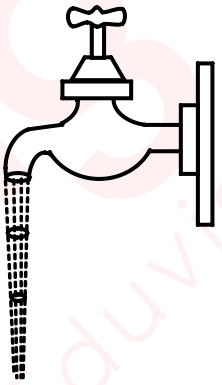

(A) As the water moves down, its speed increases and hence its pressure decreases. It is then compressed by the atmosphere

(B) Falling water tries to reach a terminal velocity and hence reduces the area of cross-section to balance upward and downward forces

(C) The mass of water flowing past any cross-section must remain constant. Also, water is almost incompressible. Hence, the rate of volume flow must remain constant.

(D) The surface tension causes the exposed surface area of the liquid to decrease continuously

Solution · Q49 **Answer: (C)**

The same mass of water crosses every section each second. Water is almost incompressible, so the volume rate of flow is also the same.

By the equation of continuity,

$$A_1v_1 = A_2v_2$$

The speed v increases as the water falls, so the area of cross-section A decreases.

IAPT answer: (C) | **Zigyan answer:** (C)

50. If x, y, z are positive integers with x + y + z = 10, the maximum value of xy + yz + zx + xyz is

(A) 69 (B) 59 (C) 64 (D) 61

Solution · Q50 **Answer: (A)**

Call the required expression S. Expanding the product,

$$(1 + x)(1 + y)(1 + z) = 1 + (x + y + z) + S$$

$$\Rightarrow S = (1 + x)(1 + y)(1 + z) - 11$$

The three brackets are integers with a fixed total.

$$(1 + x) + (1 + y) + (1 + z) = 13$$

Their product is greatest when they are as nearly equal as possible: 4, 4 and 5.

$$\Rightarrow S = 4 \times 4 \times 5 - 11$$

$$\Rightarrow S = 69$$

IAPT answer: (A) | **Zigyan answer:** (A)

51. If a and b are positive real numbers and AB is a line segment in a plane. The possible number of distinct points C in the plane for which the triangle ABC will have the lengths of medians and altitudes through C as a and b respectively is

(A) 1 (B) 2 (C) 4 (D) Infinitely many

Solution · Q51 **As per Zigyan: (C)**

Let M be the midpoint of AB.

Since the median CM has length a, C lies on the circle of centre M and radius a.

Since the altitude has length b, C lies on one of the two lines parallel to AB at a distance b from it.

Take a > b, the general case (an altitude cannot be longer than the median from the same vertex).

Each of the two lines then cuts the circle at two points, so C has four distinct positions.

Check: With M as origin and AB along the horizontal axis, both coordinates of C can independently be positive or negative, which gives four different points when a is greater than b.

IAPT answer: (C) | **Zigyan answer:** (C)

52. The pair of planets, that is never visible at midnight is

(A) Mars and Neptune (B) Venus and Neptune
(C) Neptune and Mercury (D) Mercury and Venus

Solution · Q52 **Answer: (D)**

Mercury and Venus are inferior planets, so they always appear close to the Sun.

Their greatest elongations are only about 28° and 47°.

At midnight an observer faces away from the Sun, so for low and middle latitudes both planets are below the horizon.

IAPT answer: (D) | **Zigyan answer:** (D)

53. A drop of water is broken into two droplets of equal size. For this process, the correct statement is

(A) The sum of temperature of the two droplets together is equal to the original temperature of the drop

(B) The sum of masses of the two droplets is equal to the original mass of the drop

(C) The sum of the radii of two droplets is equal to the radius of the original drop

(D) The sum of the surface areas of the two droplets is equal to the surface area of the original drop

Solution · Q53 **Answer: (B)**

The volume of water is unchanged:

$$(4/3)\pi R^3 = 2 \times (4/3)\pi r^3$$

$$\Rightarrow r = 2^{-1/3}R$$

So the two radii, and likewise the two surface areas, add up to more than the original value. Temperature is not an additive quantity.

Mass is conserved, so the two masses add up to the original mass.

IAPT answer: (B) | **Zigyan answer:** (B)

54. A bullet of mass m moving horizontally with velocity v strikes a wooden block of mass M suspended with a string of length l. The bullet gets embedded into the block as a result the block rises up to a height h. The initial speed of wooden block and the embedded bullet system is

(A) $\sqrt{2gh}$

(B) $\frac{M+m}{m}\sqrt{2gh}$

(C) $\frac{m}{M+m}2gh$

(D) $\frac{M+m}{M}\sqrt{2gh}$

Solution · Q54 **Answer: (A)**

Let V be the speed of the block and bullet just after the collision. Mechanical energy is conserved while they swing up through the height h.

$$(1/2)(M+m)V^2 = (M+m)gh$$

$$\Rightarrow V = \sqrt{2gh}$$

IAPT answer: (A) | **Zigyan answer:** (A)

55. The number of diagonals in a regular polygon of 100 sides is

(A) 4950 (B) 4850 (C) 4750 (D) 4650

Solution · Q55 **Answer: (B)**

Joining any two of the 100 vertices gives either a side or a diagonal. For the number of diagonals N,

$$N = {}^{100}C_2 - 100$$

$$\Rightarrow N = 4950 - 100$$

$$\Rightarrow N = 4850$$

IAPT answer: (B) | **Zigyan answer:** (B)

56. Let a, b, c and p, q, r be all positive real numbers such that a, b, c are in G.P. and $a^p = b^q = c^r$. Then

(A) p, q, r are in G.P.
(B) p, q, r are in A.P.
(C) p, q, r are in H.P.
(D) p^2, q^2, r^2 are in G.P.

Solution · Q56 **Answer: (C)**

Call the common value of the three powers K, which is not 1.

$$a^p = b^q = c^r = K$$

Taking logarithms,

$$\ln a = (\ln K)/p,\ \ln b = (\ln K)/q$$

$$\ln c = (\ln K)/r$$

Since a, b, c are in G.P., their logarithms are in A.P.

$\therefore$ 1/p, 1/q, 1/r are in A.P., so p, q, r are in H.P.

IAPT answer: (C) | **Zigyan answer:** (C)

57. If you look overhead at 6 p.m. (standard sunset time) and notice that the moon is directly overhead, what phase is it in?

(A) Last quarter
(B) First quarter
(C) Full moon
(D) 12th day from new moon

Solution · Q57 **Answer: (B)**

At 6 p.m. the Sun is on the western horizon, while the Moon is overhead.

So the Moon is 90° east of the Sun, with its western half lit.

It is a waxing half Moon, which is the first quarter.

IAPT answer: (B) | **Zigyan answer:** (B)

58. The potential energy of a particle in a certain field has the form $U = \frac{a}{r^2} - \frac{b}{r}$, where a and b are positive constants and r is the distance from the centre of the field. Find the value of r_0 corresponding to the equilibrium position of the particle. Is the equilibrium a stable or unstable

(A) $\frac{2a}{b}$ stable equilibrium
(B) $\frac{a}{b}$ stable equilibrium
(C) $\frac{2a}{b}$ unstable equilibrium
(D) $\frac{a}{b}$ unstable equilibrium

Solution · Q58 **Answer: (A)**

At equilibrium the force is zero.

$$F = -\frac{dU}{dr} = \frac{2a}{r^3} - \frac{b}{r^2} = 0$$

$$\Rightarrow r_0 = \frac{2a}{b}$$

For stability,

$$\frac{d^2U}{dr^2} = \frac{6a}{r^4} - \frac{2b}{r^3}$$

At the equilibrium position,

$$\frac{d^2U}{dr^2} = \frac{2a}{r_0^4} > 0$$

U is a minimum there, so the equilibrium is stable.

IAPT answer: (A) | **Zigyan answer:** (A)

59. The force acting on a particle is shown as a function of the position in a one dimensional system. The incorrect statement is

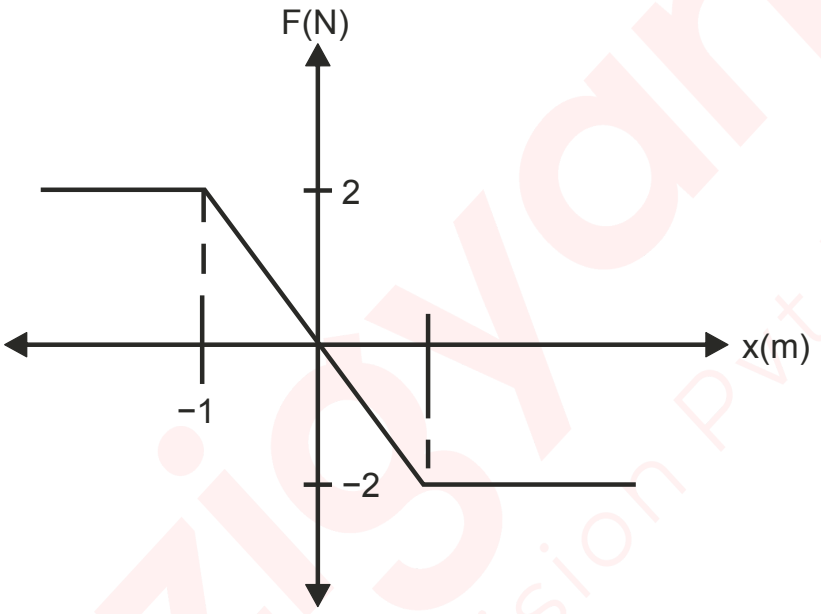

(A) If total energy of the system is 1 J, motion is SHM.

(B) If total energy of the system is 2J, motion is periodic.

(C) Work done on the particle as it moves from x= 3 m to 2 m is 2J.

(D) Work done on the particle as it moves from x = 3 m to 2 m is −2J.

Solution · Q59 **Answer: (D)**

On the sloping part, from −1 m to +1 m,

$$F = -2x$$

Taking the potential energy as zero at the origin,

$$U = x^2$$

So U reaches 1 J at both ends of this part.

(A) With 1 J the particle stays on this part, where the force is proportional to the displacement and opposite to it: SHM. True.

(B) With 2 J it goes on to 1.5 m on each side against a constant 2 N, then returns: periodic. True.

(C), (D) Work done in going from 3 m to 2 m:

$$W = \int_3^2 (-2)\,dx$$

$$\Rightarrow W = +2 \text{ J}$$

So (C) is true and (D) is the incorrect statement.

IAPT answer: (D) | **Zigyan answer:** (D)

60. Let S_k be the sum of an infinite G.P. whose first term is k and common ratio is $\frac{k}{(k+1)}$ ($k > 0$). Then the value of $\sum_{k=1}^{k=\infty} \frac{(-1)}{S^k}$ is equal to

(A) $\log_e 4$ (B) $\log_e 2 - 1$ (C) $1 - \log_e 2$ (D) $1 - \log_e 4$

Solution · Q60 **As per Zigyan: (D)**

The index k is misprinted in the series. Its general term is taken as

$$\frac{(-1)^k}{S_k}$$

Sum of the infinite G.P.:

$$S_k = \frac{k}{1 - \frac{k}{k+1}}$$

$$\Rightarrow S_k = k(k+1)$$

Split the required sum T into partial fractions:

$$T = \sum_{k=1}^{\infty} (-1)^k \left(\frac{1}{k} - \frac{1}{k+1}\right)$$

Using the series for the natural logarithm of 2,

$$\sum_{k=1}^{\infty} \frac{(-1)^k}{k} = -\ln 2$$

$$\sum_{k=1}^{\infty} \frac{(-1)^k}{k+1} = \ln 2 - 1$$

$$\Rightarrow T = -\ln 2 - (\ln 2 - 1)$$

$$\Rightarrow T = 1 - \log_e 4$$

Check: The first terms −1/2, +1/6, −1/12 and +1/20 give partial sums that swing about, and close in on, −0.386, the value of option (D).

IAPT answer: question dropped by IAPT | **Zigyan answer:** (D)

61. Which of the following is the closest to the distance in kilometers of 30° extent of longitude on the surface of the earth along the equator? How much is the corresponding distance along a small circle (parallel to the equator) at 60°N latitude?

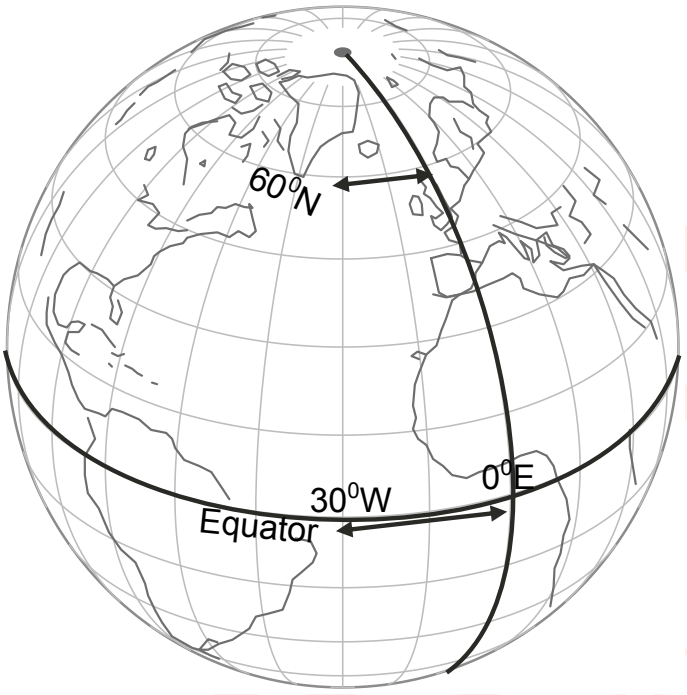

(A) 3500 Km, 3000 Km (B) 3000 Km, 2000 Km (C) 2500 Km, 1750 Km (D) 3300 Km, 1650 Km

Solution · Q61 **Answer: (D)**

Radius of the earth,

$$R \approx 6400 \text{ km}$$

Distance along the equator,

$$d = 6400 \times \frac{\pi}{6} \text{ km}$$

$$\Rightarrow d \approx 3350 \text{ km}$$

Radius of the parallel at 60° N,

$$r = R \cos 60° = R/2$$

Along this parallel,

$$d' = d \cos 60°$$

$$\Rightarrow d' \approx 1675 \text{ km}$$

Closest values are 3300 km and 1650 km.

IAPT answer: (D) | **Zigyan answer:** (D)

62. Any location on the surface of Earth, as a sphere, is determined by two coordinates – Latitude and Longitude. Latitude of the North Pole is 90 degree. Its corresponding longitude is

(A) 0 degree
(B) 90 degree
(C) 180 degree
(D) None of these / indeterminate

Solution · Q62 **Answer: (D)**

All lines of longitude meet at the North Pole.

So no single longitude can be assigned to it; it is indeterminate.

IAPT answer: (D) | **Zigyan answer:** (D)

63. Two long wires AB and CD carrying currents I_1 and I_2 are perpendicular to each other as shown in the figure (wires are insulated from each other)

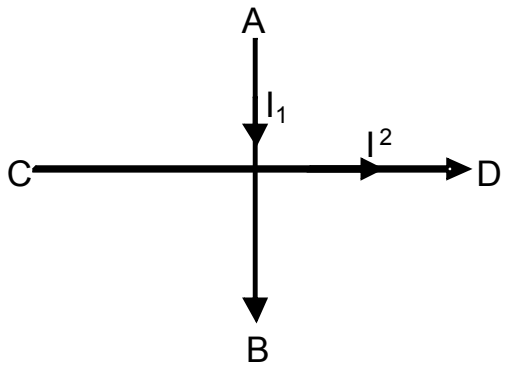

(A) Force on wire AB is towards left
(B) Force on wire AB is towards right.
(C) Torque on wire AB is clockwise.
(D) Torque on wire AB is anticlockwise.

Solution · Q63 **Answer: (D)**

The field of CD is out of the page above CD and into the page below it.

Force on an element of AB,

$$d\vec{F} = I_1\left(d\vec{\ell} \times \vec{B}\right)$$

The part of AB above CD is pushed left and the part below CD is pushed right.

By symmetry these forces are equal and opposite, so the net force on AB is zero.

Their turning effect on AB is anticlockwise.

IAPT answer: (D) | **Zigyan answer:** (D)

64. A right circular cone of the height h and radius r is suspended in liquid of density (ρ). The density of cone is 2ρ and its circular face is at a depth $\frac{h}{3}$ The force exerted by liquid on the curved surface of cone is

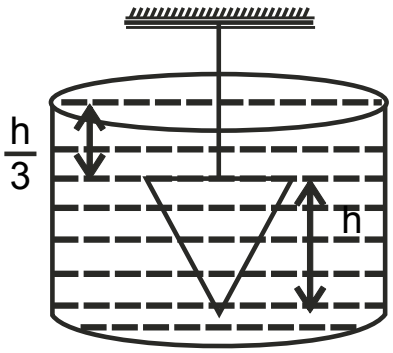

(A) zero

(B) $\frac{\pi r^2 h\rho g}{3}$

(C) $\pi r^2 h\rho g$

(D) $\frac{2\pi r^2 h\rho g}{3}$

Solution · Q64 **Answer: (D)**

Leaving out atmospheric pressure,

Upthrust on the cone:

$$F_B = \frac{\pi r^2 h\rho g}{3}$$

Downward force on the circular face:

$$F_1 = \rho g \frac{h}{3} \times \pi r^2$$

Upthrust is the resultant of the upward force F_2 on the curved surface and the downward force F_1.

$$F_B = F_2 - F_1$$

$$\Rightarrow F_2 = F_B + F_1$$

$$\therefore F_2 = \frac{2\pi r^2 h\rho g}{3}$$

IAPT answer: (D) | **Zigyan answer:** (D)

65. A straight line through the point of intersection of the line x + 2y = 4 and 2x + y = 4 meets the coordinate axes at A and B. The locus of the midpoint of AB is

(A) 3(x + y) = 2xy (B) 2(x + y) = 3xy (C) 2(x + y) = xy (D) (x + y) = 3xy

Solution · Q65 **Answer: (B)**

The two given lines intersect at the point

(4/3, 4/3)

Let the midpoint of AB be (h, k). Then A is (2h, 0) and B is (0, 2k).

Equation of AB:

$$\frac{x}{2h} + \frac{y}{2k} = 1$$

AB passes through the point of intersection.

$$\Rightarrow \frac{4}{3}\left(\frac{1}{2h}+\frac{1}{2k}\right)=1$$

$$\Rightarrow 2(h+k)=3hk$$

$$\therefore 2(x+y)=3xy$$

IAPT answer: (B) | **Zigyan answer:** (B)

66. Let y be the solution of the differential equation $x\frac{dy}{dx}=\frac{y^2}{1-y\log x}$ satisfying y(1) = 1. Then y satisfies

(A) $y = x^{y-1}$ (B) $y = x^{y}$ (C) $y = x^{y+1}$ (D) $y = x^{y+2}$

Solution · Q66 **Answer: (B)**

Treat y as the independent variable and let

$$u = \log x$$

The equation becomes linear:

$$\frac{du}{dy}+\frac{u}{y}=\frac{1}{y^2}$$

Integrating factor is y.

$$\Rightarrow \frac{d}{dy}(uy)=\frac{1}{y}$$

$$\Rightarrow uy = \log y + C$$

From the given condition,

$$C = 0$$

$$\Rightarrow y \log x = \log y$$

$$\therefore y = x^{y}$$

IAPT answer: (B) | **Zigyan answer:** (B)

67. The circle on the celestial sphere along which declination of a star is measured is called

(A) Diurnal circle (B) Great circle (C) Hour circle (D) Meridian

Solution · Q67 **Answer: (C)**

Declination is the angular distance of a star north or south of the celestial equator.

It is measured along the circle through both celestial poles and the star, called the hour circle.

IAPT answer: (C) | **Zigyan answer:** (C)

68. A circular wire frame of radius R is dipped in a soap solution of surface tension S. When it is taken out, a thin soap film is formed inside the frame. If cross sectional area of wire is A, then the stress developed in the wire due to surface tension is

(A) $\frac{\pi SR}{A}$ (B) $\frac{SR}{A}$

(C) $\frac{2SR}{A}$ (D) $\frac{SR}{2A}$

Solution · Q68 **Answer: (C)**

The soap film has two surfaces, so the inward force per unit length of the wire is

$$f = 2S$$

For one half of the ring, the forces T at its two ends balance the pull of the film:

$$2T = 2S \times 2R$$

$$\Rightarrow T = 2SR$$

So the stress in the wire is

$$\frac{T}{A} = \frac{2SR}{A}$$

IAPT answer: (C) | **Zigyan answer:** (C)

69. If two waves represented by $y_1 = 4 \sin \omega t$ and $y_2 = 3\sin\left(\omega t + \frac{\pi}{3}\right)$ interfere at a point, the amplitude of the resulting wave will be about

(A) 7 (B) 6 (C) 5 (D) 3.5

Solution · Q69 **Answer: (B)**

The phase difference between the waves is 60°, so the resultant amplitude a is given by

$$a = \sqrt{4^2 + 3^2 + 2 \times 4 \times 3\cos 60^\circ}$$

$$\Rightarrow a = \sqrt{37} \approx 6.1$$

So the amplitude is about 6.

IAPT answer: (B) | **Zigyan answer:** (B)

70. The value of $\lim_{n \to \infty} \frac{(n!)^{1/n}}{n}$ is

(A) 1 (B) $\frac{1}{e^2}$

(C) $\frac{1}{2e}$ (D) $\frac{1}{e}$

Solution · Q70 **Answer: (D)**

Let L be the required limit.

$$\log L = \lim_{n \to \infty} \frac{1}{n} \sum_{r=1}^{n} \log\left(\frac{r}{n}\right)$$

$$\Rightarrow \log L = \int_0^1 \log x dx$$

$$\Rightarrow \log L = [x \log x - x]_0^1$$

$$\Rightarrow \log L = -1$$

$$\therefore L = \frac{1}{e}$$

IAPT answer: (D) | **Zigyan answer:** (D)

71. The value of the integral $\int_1^5 [\,|x-3| + |1-x|\,]\,dx$ is equal to

(A) 4 (B) 8 (C) 12 (D) 16

Solution · Q71 **Answer: (C)**

For x from 1 to 5,

$$|1-x| = x-1$$

$$\int_1^5 (x-1)\,dx = 8$$

$$\int_1^5 |x-3|dx = \int_1^3 (3-x)\,dx + \int_3^5 (x-3)\,dx$$

$$\Rightarrow \int_1^5 |x-3|dx = 2+2 = 4$$

Adding the two parts, the value of the given integral is

$$8 + 4 = 12$$

IAPT answer: (C) | **Zigyan answer:** (C)

72. The definition of a nautical mile is

(A) one arc minute of latitude along any line of longitude
(B) one arc minute of longitude along any line of latitude
(C) one arc second of latitude along any line of longitude
(D) one arc second of longitude along any line of latitude

Solution · Q72 **Answer: (A)**

A nautical mile is the distance covered by one arc minute of latitude, measured along any meridian, that is, any line of longitude.

IAPT answer: (A) | **Zigyan answer:** (A)

73. If the earth were to become a black hole, the minimum radius to which it should be compressed is about (mass remains constant, radius of earth = 6400 km)

Physical constants you may need....

Acceleration due to gravity g = 9.8 ms^{-2}

(A) 1.8 m (B) 9.0 mm (C) 3.6 cm (D) 1.8 km

Solution · Q73 **Answer: (B)**

For a black hole, the escape speed at its surface reaches the speed of light c.

$$\sqrt{\frac{2GM}{r}} = c$$

From g at the present surface, radius R,

$$GM = gR^2$$

$$\Rightarrow r = \frac{2gR^2}{c^2}$$

$$c = 3 \times 10^8 \text{ m s}^{-1}$$

$$\Rightarrow r = \frac{2 \times 9.8 \times \left(6.4 \times 10^6\right)^2}{\left(3 \times 10^8\right)^2}$$

$$\Rightarrow r \approx 8.9 \times 10^{-3} \text{ m}$$

$$\therefore r \approx 9.0 \text{ mm}$$

IAPT answer: (B) | **Zigyan answer:** (B)

74. The in-centre of an equilateral triangle is (1,1) and the equation of one of the sides is $3x + 4y + 3 = 0$. Then the equation of the circum-circle of the triangle is

(A) $x^2 + y^2 - 2x - 2y - 2 = 0$ (B) $x^2 + y^2 - 2x - 2y - 14 = 0$

(C) $x^2 + y^2 - 2x - 2y + 2 = 0$ (D) $x^2 + y^2 - 2x - 2y + 14 = 0$

Solution · Q74 **Answer: (B)**

The inradius is the distance of the in-centre (1,1) from the given side.

$$r = \frac{|3 + 4 + 3|}{\sqrt{3^2 + 4^2}}$$

$$\Rightarrow r = 2$$

In an equilateral triangle, the circumcentre coincides with the in-centre, and the circumradius R is twice the inradius.

$$R = 2r = 4$$

$$(x - 1)^2 + (y - 1)^2 = 4^2$$

$$\Rightarrow x^2 + y^2 - 2x - 2y - 14 = 0$$

IAPT answer: (B) | **Zigyan answer:** (B)

75. How many odd numbers greater than 700000 can be formed using the digits 4, 5, 6, 7, 8, 9, 0 if repetitions are allowed ?

(A) 216 (B) 4920 (C) 9261 (D) 21609

Solution · Q75 **As per Zigyan: (D)**

Six-digit numbers are counted.

First digit (7, 8 or 9): 3 ways.

Last digit (5, 7 or 9): 3 ways.

Each of the four middle digits: 7 ways.

Required number of odd numbers:

$$3 \times 7^4 \times 3 = 21609$$

Check: There are 3×7^5 six-digit numbers beginning with 7, 8 or 9, and three out of every seven of them end in an odd digit, which again gives 21609.

IAPT answer: (D) | **Zigyan answer:** (D)

76. The FALSE statement about planetary configurations is,

(A) A superior planet can have an elongation between 0 and 180 degree

(B) Quadrature is when the elongation of a superior planet is 90 degree

(C) Quadrature is when the elongation of an inferior planet is 90 degree

(D) An inferior planet has zero elongation when in conjunction

Solution · Q76 **Answer: (C)**

Quadrature means an elongation of 90°.

An inferior planet moves inside the earth's orbit, so its elongation always stays below 90° (at most about 28° for Mercury and 47° for Venus).

So it can never be at quadrature, and statement (C) is false.

IAPT answer: (C) | **Zigyan answer:** (C)

77. When an electron in a hydrogen like atom is excited from a lower orbit to a higher orbit its

(A) kinetic energy increases and potential energy decreases.

(B) both kinetic energy and potential energy increases.

(C) both kinetic energy and potential energy decrease

(D) kinetic energy decreases and potential energy increases

Solution · Q77 **Answer: (D)**

For the orbit n of a hydrogen like atom, the kinetic energy is

$$K = \frac{13.6Z^2}{n^2}\ \text{eV}$$

and the potential energy is

$$U = -2K$$

As n increases, K decreases.

U is negative and its magnitude decreases, so U increases.

IAPT answer: (D) | **Zigyan answer:** (D)

78. The number of divisors of 480 of the form 8n + 4 (n ≥ 0), where n is an integer is

(A) 3 (B) 4 (C) 8 (D) 10

Solution · Q78 **Answer: (B)**

Prime factorisation:

$$480 = 2^5 \times 3 \times 5$$

Required form:

$$8n + 4 = 4(2n + 1)$$

So the divisor must be 2^2 times an odd divisor of 15.

Such divisors are 4, 12, 20 and 60.

∴ their number is 4.

IAPT answer: (B) | **Zigyan answer:** (B)

79. The orbital period of Jupiter is 4333 mean solar days and Jupiter's mass is 1/1048 times the Sun's mass. The orbital period of a small body, of negligible mass, moving in an elliptical orbit round the Sun with the same major axis as that of Jupiter is closest to

(A) 4329 days (B) 4333 days (C) 4335 days (D) 4339 days

Solution · Q79 **Answer: (C)**

By Kepler's third law with both masses (Sun M, orbiting body m),

$$T^2 = \frac{4\pi^2 a^3}{G(M+m)}$$

For the same a, comparing the small body (period T) with Jupiter,

$$\frac{T}{T_J} = \sqrt{1 + \frac{1}{1048}}$$

$$\Rightarrow T \approx 4333\ (1 + 1/2096)$$

$$\Rightarrow T \approx 4333 + 2.07$$

$\therefore T \approx 4335$ days

IAPT answer: (C) | **Zigyan answer:** (C)

80. One Astronomical Unit (AU) is defined as the mean distance between the Sun and the Earth: 1 AU ~ 150 million kilometer. Even this unit is also small for measuring large stellar distances which are quoted in 'light year' or 'parsec'. A star one parsec away from the Earth produces a parallax of one second of arc when viewed from the Earth six months apart in its orbit around the Sun, as shown in the accompanying figure. There by one parsec is close to

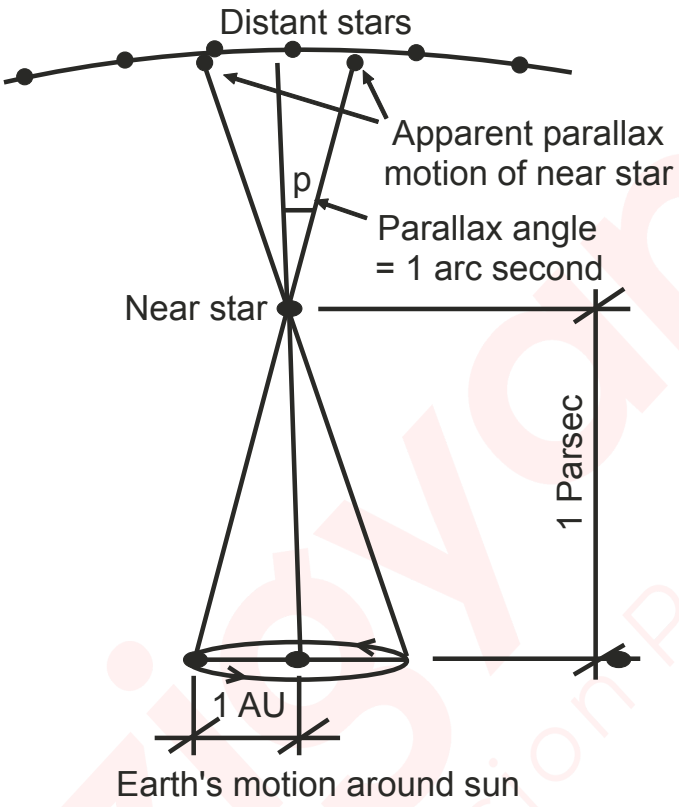

(A) 205625 AU (B) 206265 AU (C) 22620 AU (D) 226265 AU

Solution · Q80 **As per Zigyan: (B)**

The parallax angle p is half the total shift seen six months apart. It is the angle subtended by the 1 AU baseline, as the figure shows.

$$p = \pi/(180 \times 3600) \text{ rad}$$

For this very small angle,

$$d = \frac{1\ \text{AU}}{p}$$

$$\Rightarrow d = \frac{180 \times 3600}{\pi}\ \text{AU}$$

$$\therefore d \approx 206265\ \text{AU}$$

Reference: OpenStax Astronomy 2e, section 19.2 'Surveying the Stars': parallax is half the angle a star shifts between opposite sides of Earth's orbit; with a baseline of one AU, a parallax of one arcsecond puts a star at 206,265 AU, the distance named one parsec.

IAPT answer: question dropped by IAPT | **Zigyan answer:** (B)

ANSWER KEY

NSEA 2019 · PAPER CODE 41

80
QUESTIONS · 240 MARKS

IAPT final answer key for paper code 41. ★ marks an answer given as per Zigyan.

1	(A)	2	(A)	3	(A)	4	(B)	5	(B)★
6	(C)	7	(B)	8	(D)	9	(C)	10	(D)
11	(A)	12	(D)★	13	(B)	14	(A)	15	(B)
16	(B)	17	(A)	18	(A)	19	(C)	20	(C)
21	(B)	22	(D)	23	(C)	24	(B)	25	(B)
26	(C)	27	(C)	28	(C)	29	(B)	30	(A)
31	(B)	32	(D)	33	(C)	34	(A)	35	(D)
36	(B)	37	(B)	38	(B)	39	(C)	40	(D)
41	(B)	42	(D)	43	(C)	44	(D)	45	(A)
46	(D)	47	(C)	48	(C)	49	(C)	50	(A)
51	(C)★	52	(D)	53	(B)	54	(A)	55	(B)
56	(C)	57	(B)	58	(A)	59	(D)	60	(D)★
61	(D)	62	(D)	63	(D)	64	(D)	65	(B)
66	(B)	67	(C)	68	(C)	69	(B)	70	(D)
71	(C)	72	(A)	73	(B)	74	(B)	75	(D)★
76	(C)	77	(D)	78	(B)	79	(C)	80	(B)★

★ Answers as per Zigyan

- **Q5** — As per Zigyan: (B); IAPT key (B).
- **Q12** — As per Zigyan: (D); IAPT key (B).
- **Q51** — As per Zigyan: (C); IAPT key (C).
- **Q60** — As per Zigyan: (D); dropped by IAPT.
- **Q75** — As per Zigyan: (D); IAPT key (D).
- **Q80** — As per Zigyan: (B); dropped by IAPT.

zigyan

OLYMPIADS · 2026

Olympiad results



TOP ACHIEVEMENT · CHEMISTRY

Qualified the Chemistry Olympiad twice, and selected for the HBCSE camp.

Saksham Bishnoi reached the national stage of the Chemistry Olympiad in two consecutive years and was selected for the Orientation-cum-Selection Camp at HBCSE, Mumbai. 4 Years Classroom - the same student who took AIR 168 in JEE Advanced 2026.

Qualified twice | HBCSE selection camp | Only student from Faridabad

Above MAS means above the **Minimum Admissible Score**: clearing it puts a student in the national band for their subject. It is a real threshold, not a participation marker.

CHEMISTRY · ABOVE MAS



Sulokya Bibhuty
Class XII
3 Years Classroom
Above MAS



Anay Gupta
Class XI
3 Years Classroom
Above MAS



Akshat Khator
Class XI
3 Years Classroom
Above MAS



Harshit Goyal
Class XII
4 Years Classroom
Above MAS



Hardik Sharma
Class XI
3 Years Classroom
Above MAS



Aarush Kumar
Class XII
1 Year Classroom
Above MAS

PHYSICS · ASTRONOMY · MATHEMATICS

PHYSICS



Sulokya Bibhuty
Class XII
3 Years Classroom
Above MAS

PHYSICS



Saksham Bishnoi
Class XII
4 Years Classroom
Above MAS

ASTRONOMY



Sulokya Bibhuty
Class XI
3 Years Classroom
Above MAS

MATHEMATICS · IOQM



Priyanshi
Class XI
4 Years Classroom
IOQM Qualifier

OLYMPIADS WE PREPARE STUDENTS FOR

NSEP	NSEC	NSEB	NSEA	IOQM	NSEJS
Physics	Chemistry	Biology	Astronomy	Mathematics	Class X and below

The olympiad pathway starts in Class 8.

NSEJS is open to Class 10 and below - the habit of staying with one hard problem is the one JEE Advanced rewards.

Zigyan Eduvision Pvt. Ltd. · SCO No. 107, Sector 16, Faridabad 121002
0129-4048800 · +91 92115 38800 · info@zigyan.com

zigyan

RESULTS · 2021 – 2026

Our toppers, year by year

40
JEE Advanced selections in 6 years

AIR 168
best rank — Saksham Bishnoi, 2026

16 of 35
students selected, JEE Advanced 2026

14 of 35
above 98 percentile, JEE Main 2026

JEE ADVANCED SELECTIONS PER YEAR

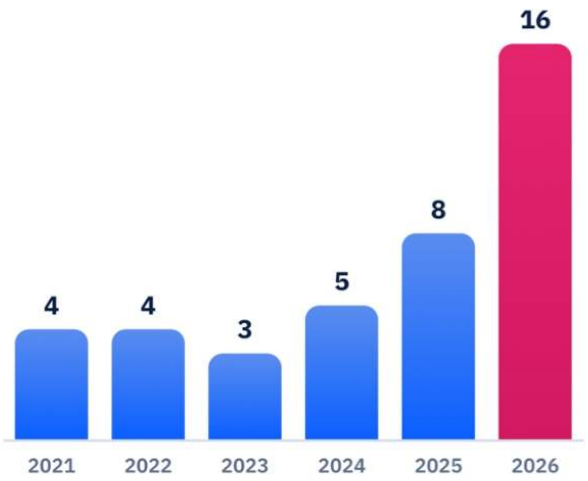

BEST RANK EACH YEAR

YEAR	JEE ADVANCED	JEE MAIN
2026	**Saksham Bishnoi** AIR 168 · 4 Years Classroom	**Saksham Bishnoi** AIR 811 · 99.95 %ile
2025	**Chakshu** AIR 4,233 · 2 Years Classroom	**Chakshu** AIR 8,538 · 99.44 %ile
2024	**Harshit** AIR 777 · 2 Years Classroom	**Harshit** AIR 1,473 · 99.91 %ile
2023	**Aditya Jain** AIR 2,373 · 2 Years Classroom	**Aditya Jain** AIR 2,503 · 99.79 %ile
2022	**Rachit Sharma** AIR 698 · 1 Year Classroom	**Rachit Sharma** AIR 1,016 · 99.90 %ile
2021	**Sparsh Mittal** AIR 2,237 · 1 Year Classroom	**Sparsh Mittal** AIR 1,562

JEE ADVANCED 2026 — THIRTEEN NAMED SELECTIONS



Saksham Bishnoi
AIR 168
4 Years Classroom



Sulokya Bibhuty
AIR 1,315
3 Years Classroom



Aarush
AIR 2,699
1 Year Classroom



Manishka
AIR 2,869
4 Years Classroom



Oojit Kumar
AIR 5,765
4 Years Classroom



Harshit Goyal
AIR 6,407
4 Years Classroom



Pranab Sharma
AIR 6,750
3 Years Classroom



Aditya Dhar
AIR 15,183
3 Years Classroom



Arpit Anshuman
AIR 19,308
4 Years Classroom



Lokesh
AIR 22,857
3 Years Classroom



Arjun
AIR 24,674
3 Years Classroom



Sanyam Gulyani
AIR 25,123
1 Year Classroom



Saket
AIR 27,628
3 Years Classroom

Sixteen students of the 2026 batch were selected in JEE Advanced; the thirteen above are named with their All India Rank.

JEE MAIN 2026 — TOP SIX, WITH PERCENTILE



Saksham Bishnoi
AIR 811
99.95 %ile
4 Years Classroom



Sulokya Bibhuty
AIR 1,095
99.94 %ile
3 Years Classroom



Harshit Goyal
AIR 2,662
99.83 %ile
4 Years Classroom



Manishka
AIR 4,817
99.70 %ile
4 Years Classroom



Oojit Kumar
AIR 5,040
99.69 %ile
4 Years Classroom



Aarush
AIR 5,276
99.67 %ile
1 Year Classroom

14 of the 35 students in the 2026 batch scored above the 98th percentile in JEE Main.

Zigyan Eduvision Pvt. Ltd. · SCO No. 107, Sector 16, Faridabad 121002
0129-4048800 · +91 92115 38800 · info@zigyan.com