zigyan

PREVIOUS YEAR PAPER · 2024

OLYMPIAD · STAGE I

NSEA

National Standard Examination in Astronomy

2024

Question paper with official answer key

60	216	120 min	41
Questions	Maximum marks	Time	Paper code

Question paper and official answer key: Indian Association of Physics Teachers (IAPT), NSEA 2024, paper code 41.
Solutions and notes: Zigyan. This booklet is not an IAPT publication.

Prepare for the Olympiads with Zigyan

www.zigyan.com

zigyan

SCO No. 107, Sector 16, Faridabad, Haryana 121002
0129-4048800 · +91 92115 38800 · info@zigyan.com

zigyan

JEE 2026 RESULTS

OUR TOPPERS

When talent meets the right guidance.

Saksham Bishnoi and Sulokya Bibhuty - our JEE 2026 toppers from Zigyan, Sector 16 - with the programme they took and the rank they earned.



Rahul Kaushik Sir
Founder & Director, Zigyan Eduvision
23 years of teaching



Saksham Bishnoi

4 YEARS CLASSROOM

JEE ADVANCED 2026	JEE MAIN 2026
AIR 168	AIR 811
	99.95 percentile



Sulokya Bibhuty

3 YEARS CLASSROOM

JEE ADVANCED 2026	JEE MAIN 2026
AIR 1,315	AIR 1,095
	99.94 percentile

OLYMPIAD RESULTS

Above the Minimum Admissible Score - the national band for the subject

CHEMISTRY

- Sulokya Bibhuty — 3 Years Classroom
- Anay Gupta — 3 Years Classroom
- Akshat Khator — 3 Years Classroom
- Harshit Goyal — 4 Years Classroom
- Hardik Sharma — 3 Years Classroom
- Aarush Kumar — 1 Year Classroom

PHYSICS

- Sulokya Bibhuty — 3 Years Classroom
- Saksham Bishnoi — 4 Years Classroom

ASTRONOMY

- Sulokya Bibhuty — 3 Years Classroom

MATHEMATICS (IOQM)

- Priyanshi — 4 Years Classroom

Saksham Bishnoi qualified the Chemistry Olympiad twice and was selected for the Orientation-cum-Selection Camp at HBCSE, Mumbai.

16 selections	16 of 35	AIR 168
in JEE Advanced 2026	students of the batch selected	best JEE Advanced rank

Start where they started.

Register for ZEST - ₹200 · www.zigyan.com/scholarship/zest

+91 92115 38800
info@zigyan.com

Given in the question paper

Physical constants you may need….

Magnitude of charge on electron $e = 1.60 \times 10^{-19}\,C$	Speed of light in free space $c = 3 \times 10^{8}\ ms^{-1}$
Mass of electron $m_e = 9.11 \times 10^{-31}\,kg$	Speed of sound in dry air at 0°C $v = 332\ ms^{-1}$
Mass of proton $m_p = 1.67 \times 10^{-27}\,kg$	Permittivity of free space $\varepsilon_0 = 8.85 \times 10^{-12}\,C^2/Nm^2$
Mass of neutron $m_n = 1.67 \times 10^{-27}\,kg$	Permeability of free space $\mu_0 = 4\pi \times 10^{-7}\,H/m$
Acceleration due to gravity $g = 9.81\ ms^{-2}$	Planck's constant $h = 6.626 \times 10^{-34}\,Js$
Universal gravitational constant $G = 6.67 \times 10^{-11}\,Nm^2/kg^2$	Rydberg constant $R = 1.097 \times 10^{7}\,m^{-1}$
Universal gas constant $R = 8.31\ J\ /\ mol\ K$	Astronomical unit $= 1.50 \times 10^{11}\,m$
Boltzmann constant $k = 1.38 \times 10^{-23}\,J\ /\ K$	Radius of Sun $R = 6.96 \times 10^{8}\,m$
Stefan's constant $\sigma = 5.67 \times 10^{-8}\,W/m^2K^4$	Mass of Sun $M = 2.0 \times 10^{30}\,kg$
Avogadro's constant $A = 6.022 \times 10^{23}\,mol^{-1}$	Radius of the Earth = 6371 km
Faraday constant $= 96{,}500\ C\ /\ mol$	Mass of the Earth = $5.97 \times 10^{24}\,kg$

PART A-1 · ONE CORRECT OPTION

Q. 1 – 48 · +3 for a correct answer, –1 for a wrong one

1. The energy radiated per second by star A is twice that radiated per second by star B. Also the distance of star A from Earth is twice to that of star B from Earth. Which of the two stars appears brighter when seen from the Earth, and by how much?

(A) Star A appears 2 times brighter than star B
(B) Star B appears 2 times brighter than star A
(C) Star B appears 4 times brighter than star A
(D) The observed brightness of the stars A and B are equal

2. How large should the aperture of a telescope be in order to achieve a diffraction limit of 0.001 arc second for visible light of wavelength 500 nm?

(A) 2.4 m (B) 12.6 m (C) 126 m (D) 24 m

3. A nearby star, Alpha Centauri, subtends a parallax angle of 0.7420″. The distance to Alpha Centauri from us is

(A) 1.35 pc (B) 13.5 pc (C) 0.742 pc (D) 7.42 pc

4. The spectral lines of two stars in an eclipsing binary system with both stars moving in circular orbits, shift back and forth with a period of 2 years, T = 6.3×10^7 second. The lines of one star (star 1) shift twice as far as the lines of the other (star 2). Which one of the following statements is true?

(A) Masses of star 1 and star 2 are equal

(B) Mass of star 2 is twice the mass of star 1

(C) Mass of star 1 is twice the mass of star 2

(D) Nothing can be predicted about the masses of the two stars from the given data

5. The reciprocal of Hubble's constant, or $1/H_0$, tells us the age of the universe if the expansion rate has remained constant over time. How would the estimated age of the universe differ if the measured value of H_0 were 44 km/s/Mly rather than 22 km/s/Mly?

(A) The estimated age will remain the same

(B) Indeterminate

(C) The estimated age will be twice the current estimated age

(D) The estimated age will be half the current estimated age

6. If you live at latitude of 28 degrees North, what is the angle you observe between the northern horizon and North Celestial pole?

(A) 62 degrees (B) 90 degrees (C) 23.5 degrees (D) 28 degrees

7. A new planet is discovered to be orbiting a star which has the same mass as our Sun in an approximately circular orbit. The planet orbits the star every 3 months. Approximately, what is the average distance of the planet from the star?

(A) 3 AU (B) 0.4 AU (C) 0.125 AU (D) 1.25 AU

8. Suppose a future space station orbits the Earth in a circular geosynchronous orbit, 42,000 kilometre from the centre of the Earth. With what speed with respect to Earth, must a spacecraft be launched from this space station so as to escape the Earth?

(A) 11.2 km/s (B) 112 km/s (C) 4.35 km/s (D) 2.45 km/s

9. Planets orbiting very close to black holes show general relativistic effects; the orbits of such planets are precessing ellipses i.e. the major axis of the ellipse rotates about the occupied focus. A planet is on an elliptical orbit with semi-major axis 1.0 AU around an isolated black hole of one solar mass. A second planet is orbiting the black hole at a distance of 0.3 AU. If observations of this second planet are started when it is closest to the black hole, the minimum length of time over which observations should be carried out so that the precession rate may be ascertained with better accuracy, is a little more than

(A) 30 days (B) 60 days (C) 75 days (D) 90 days

10. Spectral resolution of a grating is given by $RP = \frac{\lambda}{\delta\lambda}$ where δλ is the smallest difference in wavelength between two lines that may be resolved as separate at some order after dispersion by the grating. In the binary system consisting of a star and a planet, both the masses orbit around the common centre of mass. The orbital speed of the star will be extremely small due to its comparatively very large mass. The Doppler shift due to this orbital motion will also be extremely small. Doppler spectroscopy is a technique used to detect and estimate the orbital speeds of stars, induced by the presence of exoplanets around them. With what accuracy can the recession speed of a star be determined by simple use of a high resolution spectrograph with RP = 1,00,000 observing a spectral line at 0.3 micron?

(A) 3.0 m/s (B) 30.0 m/s (C) 3.0 km/s (D) 30.0 km/s

11. Fermions (half-integer spin particles) obey the Pauli Exclusion Principle which says that no two fermions can have all physical characteristics (like position, momentum, spin, charge, electron number, muon number etc. ...) the same. As per the uncertainty principle position and momentum can be simultaneously measured only to a precision that satisfies the relation $\Delta x \Delta p_x \geq \frac{\hbar}{2}$. So a 'cell' in phase space (position-momentum space) of size $\left(\frac{\hbar}{2}\right)^3$ can contain only a pair of any one type of neutrino (for example electron neutrino) of opposing spin and all other quantum numbers the same. Consider a spherical dwarf galaxy of a total mass M and radius R consisting of a large amount of dark matter and very little ordinary matter. Suppose dark matter consists of n_f different types of neutrinos all having the same mass m equivalent to 1 eV. Given that the escape speed from the galaxy $v_{esc} = \sqrt{\frac{2GM}{R}}$, a limit may be put on n_f by the relation.

(A) $\frac{\left(\frac{4\pi}{3}\right)^2 \left(m v_{esc} R\right)^3}{\left(\frac{\hbar}{2}\right)^3} \times 2n_f \times m < M$

(B) $\frac{\left(\frac{4\pi}{3}\right)^2 \left(m v_{esc} R\right)^3}{\left(\frac{\hbar}{2}\right)^3} \times n_f \times m < M$

(C) $\frac{\left(\frac{4\pi}{3}\right)^2 \left(m v_{esc} R\right)^3}{\left(\frac{\hbar}{2}\right)^3} \times n_f \times m > M$

(D) No such limit may be extracted

12. Inverse Compton scattering is the scattering of low energy photon by high energy ultra-relativistic charged particle. The photon gains energy and the charged particle loses energy. The frequency of the photon gets multiplied by a factor equal to the square of the Lorentz factor of the ultra-relativistic particle. The low energy photons of the Cosmic Microwave Background (CMB) can be scattered by ultra-relativistic electrons in radio relics in galaxy clusters. If the microwave photons of the CMB (wavelength around 10 cm) get scattered, on the average, into soft X-ray region (wavelength ~ nanometre), the Lorentz factor for the electrons involved is

(A) ~ 10^4 (B) ~ 10^8 (C) ~ 2.73×10^9 (D) ~ 2.73

13. The Saha ionization formula gives the ratio of the number of (n + 1) times ionized ions of an element per unit volume to the number of n times ionized ions of the same element in the same volume in a plasma. Normal stars show absorption spectra due to atoms/ions/molecules of the atmosphere of the star in a lower energy state absorbing photons of appropriate energy, from the continuum radiation emitted by the photosphere, to go into a higher energy state. Given the Saha ionization formula as $\log\frac{n_{i+1}}{n_i} = -0.1761 - \log P_e + \log\frac{U_{j+1}(T)}{U_j(T)} + 2.5\log T - \frac{5040E_j}{T}$ where, n_{i+1} is the number density of (i + 1) times ionized ions, n_i is the number density of i times ionized ions, P_e is the electron pressure, $U_.(T)$ is the partition function and E_j is the ionization energy of the j times ionized ion. The ionization energy of hydrogen = 13.54 eV, of first ionization of helium = 24.48 eV and of second ionization of helium = 54.17 eV. As the temperature of photosphere decreases from ~ 50,000 K, in the spectrum

(A) Strength of lines of ionized helium and hydrogen will decrease together

(B) Lines of hydrogen will decrease in strength, helium will increase

(C) Lines of ionized helium will decrease in strength, of helium increase

(D) Strength of hydrogen lines will decrease, ionized helium will increase

14. The observed Doppler shift of spectral lines of galaxies is used to determine their velocity of recession from us using the formula v = cz where $z = \frac{\delta\lambda}{\lambda}$ (this may then be used in the Hubble relation v = HD to determine the distance to the galaxy). Spectrometry is expensive since the received light is highly dispersed and only a small number of photons are available in small frequency ranges and so observations have to be integrated over long hours to capture the spectrum. In photometry, light transmitted through various filters (which transmit light in a small band of wavelengths centred on given wavelengths) is measured. Photometry is much cheaper and faster. The hydrogen surrounding galaxies absorb light with wavelength below ~100 nm. Hence the observed brightness of the galaxy will drop drastically below this wavelength of emission. A galaxy was imaged through the u, g, r, i, z filters in the Sloan Digital Sky Survey. The pivot wavelengths of these filters are 354, 477, 623, 763, and 913 nm respectively. A galaxy is visible when imaged through the last three filters. The galaxy 'drops out' and is not visible through the other filters. The redshift of the galaxy as determined by this 'dropout method' lies between

(A) 4.77 and 6.23 (B) 5.77 and 7.23 (C) 3.77 and 5.23 (D) 5.23 and 6.63

15. A liquid column of height 1.0 cm and having density 0.8 g/cc, is in a closed container on a horizontal surface inside Chandrayaan-3 Lander on the surface of Moon. The temperature where the landing took place was around 50 ^{0}C. What is the hydrostatic pressure on the bottom of the container? Mass of the Moon = 7×10^{22} kg and radius of the Moon = 1750 km.

Physical constants you may need....

Universal gravitational constant G = 6.67×10^{-11} Nm^2/kg^2

(A) 12.2 N/m^2 (B) 98.0 N/m^2 (C) 78.4 N/m^2 (D) 1.22 N/m^2

16. Cerenkov radiation may be defined as "electromagnetic radiation emitted when a charged particle (such as an electron) passes through a dielectric medium (such as distilled water) at a speed greater than the phase velocity (speed of propagation of a wave front in a medium) of light in that medium". Which of the following cosmic ray particles is likely to be detectable by the recording of the Cerenkov radiation emitted by it in its passage through the Earth's atmosphere. The lower atmosphere near the Earth has a refractive index of 1.002.

Physical constants you may need....

Magnitude of charge on electron e = 1.60×10^{-19} C

Mass of electron $m_e = 9.11 \times 10^{-31}$ kg

Mass of proton $m_p = 1.67 \times 10^{-27}$ kg

Speed of light in free space $c = 3 \times 10^{8}$ ms^{-1}

(A) A 13 GeV proton
(B) A 13 MeV electron
(C) A 25 MeV proton
(D) A 0.51 MeV electron

17. Which of the following animals, if they develop their own number system, is likely to write 100 where you count 64?

(A) Spiders (B) Ants (C) Crabs (D) Seahorses

18. The Mercator projection maps the surface of the globe (excluding latitudes close to the two poles) onto a cylinder whose axis coincides with the rotation axis of the globe. The cylinder when cut open with a straight cut parallel to its axis gives a rectangular map which preserves directions. Maps made utilizing this projection are hence used for marine navigation and also by major online street mapping services. On a map of this kind the length of the equator is 40 cm. How many kilometres on the Earth does 1 cm at 60° N latitude on this map correspond to? Assume that the earth is a perfect sphere.

Physical constants you may need....

Radius of the Earth = 6371 km

(A) 866 km (B) 1732 km (C) 1000 km (D) 500 km

19. Five identical letters have to be posted to five different addresses and there are two messengers available. The number of ways in which the letters may be assigned for posting is

(A) 5!/(2!3!) (B) 2^5 (C) 5^2 (D) 6

20. Consider the ellipse with equation $\frac{x^2}{9} + \frac{y^2}{b} = 1$ with one focus at (2, 0). The equation to the line that passes through the point (0, 2) and is perpendicular to the tangent to the ellipse at (x_0, y_0) is

(A) $y = \frac{9\left(1 - \frac{x_0^2}{9}\right)^{1/2}}{\sqrt{5}\, x_0} x + 2$

(B) $y = \frac{9}{10x_0} x + 2$

(C) $y = -\frac{9\sqrt{1 - \frac{x_0^2}{9}}}{\sqrt{5}\, x_0} x + 2$

(D) $y = -\frac{9}{10x_0} x + 2$

21. Consider a planet moving on an elliptical orbit that may be represented by the equation $\frac{x^2}{9}+\frac{y^2}{5}=1$ (in some units) with the parent star at the focus at (−2, 0). The area swept by the radius vector from the focus to the planet in equal intervals of time is a constant. The ratio of the time taken to traverse the portion of the path with x < −2 to the time taken to traverse the portion of the path with x > −2 is

(A) $\frac{\left(\frac{\pi}{2}-A-B\right)}{\left(\frac{\pi}{2}+A+B\right)}$, where $A=\sin^{-1}\frac{2}{3}$ and $B=\frac{2\sqrt{5}}{9}$

(B) $\frac{\left(\frac{\pi}{4}-\alpha-\beta\right)}{\left(\frac{\pi}{4}+\alpha+\beta\right)}$, where $\alpha=\frac{1}{2}\sin^{-1}\frac{2}{3}$ and $\beta=\frac{5}{27}$

(C) 1 : 4

(D) 4 : 1

22. The percentage error in determining $\sin 30^0$ by assuming that between 0^0 and 45^0 the sine function may be approximated by a straight line is

(A) 9.3 % (B) 7.5 % (C) 5.7 % (D) 3.6 %

23. The relation R on **N**, the set of natural numbers, defined by (x, y) ∈ R if and only if xy is a perfect square is

(A) reflexive, symmetric but not transitive

(B) reflexive, symmetric and transitive

(C) symmetric but neither reflexive nor transitive

(D) symmetric, transitive but not reflexive

24. If A is a 10 × 10 matrix with determinant 2, what is the determinant of 2A?

(A) 4 (B) 512 (C) 1024 (D) 2048

25. Consider the following system of linear equations:

$kx + y + z = 2023$

$k^2x + ky + z = 2024$

$k^3x + k^2y + z = 2025$

Which of the following is true?

(A) The system has a unique solution for k = 1

(B) The system has a unique solution for any value of k

(C) The system is always inconsistent for any value of k

(D) The system has infinitely many solutions for k = 1

26. The number of real values of x in the closed interval [0, 2024π] that satisfy the equation $\sin^2 x + \sin x - 2 = 0$ is

(A) 0 (B) 1 (C) 1012 (D) 2024

27. What is the centre and radius of the circle represented by $\left|\frac{z+1}{z-2}\right| = 2$?

(A) Centre (−1, 2), Radius 2
(B) Centre (1, −2), Radius 2
(C) Centre (0, 3), Radius 2
(D) Centre (3, 0), Radius 2

28. In how many ways can 10 identical balls be distributed among three children?

(A) 30 (B) 66 (C) 120 (D) 156

29. Consider the function $f(x) = \begin{cases} 1+2x+3x^2, x \geq 2024 \\ 3+2x+x^2, x < 2024 \end{cases}$ Which of the following is **not** correct?

(A) f is discontinuous at x = 2024
(B) f has removable discontinuity at x = 2024
(C) f is continuous at c where c < 2024
(D) f is differentiable at c where c > 2024

30. What is the value of the following limit? $\lim_{n\to\infty}\left(\frac{1}{n^3+1}+\frac{4}{n^3+8}+\frac{9}{n^3+27}+.....+\frac{1}{2n}\right)$

(A) 0 (B) $\ell n\ 2$ (C) $\ell n\ 2^3$ (D) $\ell n\ 2^{1/3}$

31. The area (arbitrary units) bounded by the curves y = 4|x| and $y = x^2|x|$ is

(A) 4 (B) 8 (C) 12 (D) 16

32. Consider the set S of all functions from A = {2021, 2022, 2023, 2024} to itself. What is the probability that a randomly picked function from S is a one-one function?

(A) $\frac{3}{32}$ (B) $\frac{3}{64}$
(C) $\frac{3}{128}$ (D) $\frac{1}{64}$

33. Auroral Kilometric Radiation occurs due to emission from charged particles moving in helical paths around planetary magnetic field lines at or around the electron gyro frequency and/or its lower harmonics. Considering the emission from relativistic particles, the emission peaks around a frequency ~ $\gamma^2\upsilon_c$ where γ, the Lorentz factor is $\gamma = \frac{1}{\sqrt{\left(1-\left(\frac{v}{c}\right)^2\right)}}$ and the cyclotron frequency is $\upsilon_c = \frac{eB}{2\pi m}$.

Determine the frequency of peak emission by electrons moving at one-third the speed of light near the Earth's poles. The average strength of the Earth's magnetic field (which is approximately a dipole) at its surface is 50 μTesla. It varies from about 25 μTesla to 65 μTesla over the surface.

Physical constants you may need....

Magnitude of charge on electron e = 1.60×10^{-19} C

Mass of electron $m_e = 9.11 \times 10^{-31}$ kg

(A) 1.78×10^{12} Hz (B) 1.89 MHz (C) 2×10^{12} Hz (D) 2 MHz

34. Thermal diffusivity of a material is related to the speed with which thermal equilibrium is reached. Thermal diffusivity $a = \frac{k}{\rho c}$ where k is the thermal conductivity, ρ is the density and c is the specific heat capacity of the material. Vessel of thick walls and bottom, made of which of the following metals/alloys aluminium (k = 385 W/m.K; ρ = 2.7 g/cc; c = 0.9 J/g.^{0}C all at room temperature) or copper (k = 205 W/m.K; ρ = 8.96 W/m.K; c = 0.385 J/g.^{0}C) or steel (k = 50.2 W/m.K; ρ = 7.75 W/m.K; c = 0.42 J/g.^{0}C) is more likely to develop cracks if cold water is suddenly poured in after the vessel has been heated to 400 kelvin. The other conditions like size, shape and thickness of the walls and the bottom of the vessels remaining the same.

(A) Aluminium
(B) Steel
(C) Copper
(D) All the three equally likely

35. At the interface between two media which are transparent to the incident light, specular reflection with angle of reflection equal to angle of incidence will take place if surface irregularities are small (scale of micro-roughness less < $\frac{1}{100}$ times the wavelength of incident light). Reflectance ρ is the fraction of the incident intensity that is reflected. For light going from a rarer medium to a denser one

$\rho_{par} = \left(\frac{n^2\cos\theta - \sqrt{\left(n^2 - \sin^2\theta\right)}}{n^2\cos\theta + \sqrt{\left(n^2 - \sin^2\theta\right)}}\right)^2$ and $\rho_{per} = \left(\frac{\cos\theta - \sqrt{\left(n^2 - \sin^2\theta\right)}}{\cos\theta + \sqrt{\left(n^2 - \sin^2\theta\right)}}\right)^2$ are the reflectances

respectively for radiation polarized parallel to the interface and perpendicular to that. Here, n is the refractive index of medium two with respect to medium one. For unpolarised light ρ is the mean of ρ_{par} and ρ_{per}; it is a monotonic function of the angle of incidence θ. Headlights of a faraway car coming towards you are getting reflected off the wet road into your eyes. The emission cone of light is narrow. The brightness of the reflection will be

(A) greatest when car is farther away
(B) independent of distance
(C) greatest when car is nearer
(D) increases continuously

36. Light from a sodium vapour lamp is diffracted by a plane transmission diffraction grating with N = 4000 lines per cm. The light is incident normally on the grating placed in air. The maximum angular separation (in minute of arc) achieved between the sodium doublets?

(A) 0.014'
(B) 0.029'
(C) 0.155'
(D) 9.9'

37. A proton with kinetic energy 1 keV is shot at a static uranium nucleus. The radius of the uranium nucleus is approximately 15 femto-meter, the range of the strong force is of the order of a femto-meter and the impact parameter is 50 femto-meter. The angular momentum of the proton with respect to the centre of the Uranium nucleus in units of the reduced Planck's constant ($\hbar$) is

Physical constants you may need....

Magnitude of charge on electron e = 1.60×10^{-19} C

Mass of proton $m_p = 1.67 \times 10^{-27}$ kg

Planck's constant h = 6.626×10^{-34} Js

(A) 6.96
(B) 55.2
(C) 1.04
(D) 0.346

38. In quantum mechanics the wave function carries all the information about the system. The spin part of the general state of a spin half particle, with spin pointing in the (θ, ϕ) direction in three dimensional space can be written down in matrix form as $|\alpha> = \begin{pmatrix} \cos\frac{\theta}{2} \\ e^{i\varphi}\sin\frac{\theta}{2} \end{pmatrix}$. The scalar product between two vectors |λ> and |ρ> is given by <λ||ρ> where <λ| stands for the complex conjugate transpose of |λ>. The vector orthogonal to |α> is

(A) $\begin{pmatrix} \sin\frac{\theta}{2} \\ -e^{-i\varphi}\cos\frac{\theta}{2} \end{pmatrix}$ (B) $\begin{pmatrix} \cos\frac{\theta}{2} \\ -e^{-i\varphi}\sin\frac{\theta}{2} \end{pmatrix}$

(C) $\begin{pmatrix} \sin\frac{\theta}{2} \\ -e^{i\varphi}\cos\frac{\theta}{2} \end{pmatrix}$ (D) $\begin{pmatrix} \cos\frac{\theta}{2} \\ -e^{i\varphi}\sin\frac{\theta}{2} \end{pmatrix}$

39. The value of $\frac{h}{e^2}$ in SI units is

Physical constants you may need....

Magnitude of charge on electron e = 1.60×10^{-19} C

Planck's constant h = 6.626×10^{-34} Js

(A) 25.9 kΩ (B) 259 kV (C) 25.9 kJ/C^2 (D) 259 kJ/A^2

40. Three identical convex lenses of focal length f have been placed with common principal axis along the X axis. The separation between two adjacent lenses is f. A laser beam is made incident parallel to principal axis. If the middle lens is now slightly shifted along –ve y direction, the emergent rays from the third lens will

(A) shift upward in the +ve y direction and stay parallel to principal axis

(B) move upward

(C) shift downward in the –ve y direction and stay parallel to principal axis

(D) move downward

41. Consider a coil of inductance 22.4 mH is connected in series with a capacitor 22.4 μF. The coil has resistance 22.4 Ω. This combination is connected to an AC source of 224 Hz, rms 22.4 V sinusoidal signal. The rms current in the circuit will be

(A) 262 mA (B) 354 mA (C) 501 mA (D) 1000 mA

42. A proton moving with speed of 20 km/s enters a 200 cm long and 2.0 cm radius solenoid close to its axis. Solenoid has magnetic field of 200 gauss. If it leaves from the other end of the solenoid in 200 μs, how many revolutions can it complete (approximately) while inside the solenoid, (neglect end effects)?

Physical constants you may need....

Magnitude of charge on electron e = 1.60×10^{-19} C

Mass of proton m_p = 1.67×10^{-27} kg

(A) 20 (B) 61 (C) 102 (D) 122

43. Four charges are placed at points whose cartesian coordinates are +Q(−a, −a, 0), −Q(−a, a, 0), +Q(a, a, 0) and −Q(a, −a, 0). The number of neutral points where electric field is zero is:

(A) zero (B) one (C) four (D) infinite

44. Stars emit radiation approximately like perfectly black bodies. The amount of light energy emitted per unit time is called the luminosity of the star. Luminosity L and radius R of main sequece stars whose masses are neither too high nor too low are related to mass m of star as $L \propto m^{3.5}$ and $R \propto m^{0.8}$. The surface temperature T depends on the mass as

(A) $T \propto m^{-2.1}$ (B) $T \propto m^{0.475}$ (C) $T \propto m^{1.1}$ (D) $T \propto m^{1.275}$

45. A box of 22.4 litre is filled with ideal gas at pressure 2.00 atm and temperature 300 K. The box is opened in vacuum chamber of volume 44.8 litres. The final temperature of the gas will be

(A) 150 K (B) 200 K (C) 300 K (D) 450 K

46. If the density of a planet is varying with radius as $\rho(r) = \rho_0\left(1 - \left(\frac{r}{R}\right)^2\right)$, its gravity will be maximum at

(A) $r = \frac{5}{9}R$ (B) $r = \frac{3}{5}R$

(C) $r = \frac{\sqrt{5}}{3}R$ (D) $r = \left(\frac{5}{9}R\right)^{3/2}$

47. In the following circuit, voltmeter has 40 kΩ resistance and ammeter has 40 Ω resistance. Their readings are 4.00 V and 40.0 mA respectively. The actual values if the meters were ideal would be

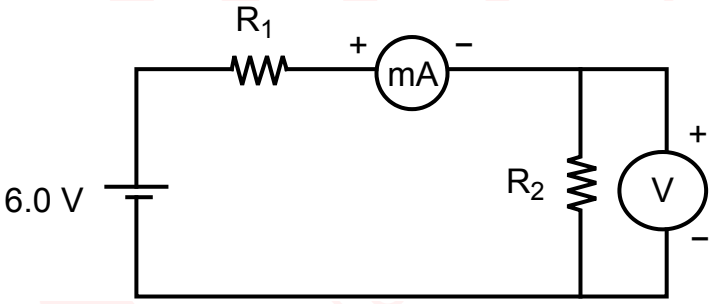

(A) Larger than 4.00V, smaller than 40.0 mA (B) Smaller than 4.00V, smaller than 40.0 mA

(C) Larger than 4.00V, larger than 40.0 mA (D) Smaller than 4.00V, larger than 40.0 mA

48. If an atom absorbs red photon of 650 nm and a yellow photon of 580 nm and emits the entire absorbed energy as a single photon, the wavelength of the emitted photon is

(A) 70.5 nm (B) 306.5 nm (C) 613 nm (D) 1230 nm

PART A-2 · ONE OR MORE CORRECT OPTIONS

Q. 49 – 60 · 6 marks only if all correct options are marked · no negative marking

49. A spectrometer can be used for

(A) determining the wavelength of different lines seen in the spectrum

(B) determining the extent to which specific spectral lines are Doppler shifted

(C) determining the elements present in the atmosphere of a star

(D) ascertaining the physical properties of the outer cooler layers of a star

50. Choose all the correct statements pertaining to Earth

(A) Winter in Southern hemisphere is longer than winter in Northern hemisphere

(B) The Earth moves fastest in its orbit during summer in Northern hemisphere

(C) The Earth is closest to the Sun in January

(D) The orbit of the Earth is farthest from the Sun close to the summer solstice in the Northern hemisphere

51. A gas cloud will collapse under self-gravity if the expansive force due to gas pressure is insufficient to counter the self-gravitational force. Such collapse and condensation can lead to the formation of stars. One way of expressing the situation is to note that collapse can take place if the travel time of sound (speed of sound is ~ rms speed of the gas molecules) across the cloud is more than the free fall time of the cloud under its own gravity. The condition for collapse may be specified as

(i) The radius of the cloud > Jeans length $= R_J = \frac{c_s}{(G\rho)^{1/2}} = \left(\frac{15k_BT}{4\pi G\mu\rho}\right)^{1/2}$ or

(ii) The mass of the cloud > Jeans mass $= \frac{4\pi}{3}R_J^3\rho$, which works out as $3\times10^4\left(\frac{T^3}{n}\right)^{1/2}$ in units of solar mass.

Here, μ is the mean molecular mass of the particles of the cloud, ρ is the density, n is the number density i.e. the number of particles per cc and T is the temperature of the cloud.

Physical constants you may need....

Mass of proton $m_p = 1.67 \times 10^{-27}$ kg

Universal gravitational constant $G = 6.67 \times 10^{-11}$ Nm^2/kg^2

Boltzmann constant $k = 1.38 \times 10^{-23}$ J / K

Mass of Sun $M = 2.0 \times 10^{30}$ kg

Which of the following interstellar molecular hydrogen clouds are unstable to collapse?

(A) Giant molecular cloud of mass 10^4 solar masses, with n = 100 per cc and T = 20 K

(B) Molecular cloud core of mass 10 solar masses, with $n = 10^5$ per cc and T = 10 K

(C) Molecular cloud core of mass equal to 1 solar mass, radius 0.001 pc and T = 10 K

(D) A molecular cloud core of radius 10 pc, temperature 10 K with $n = 10^4$ per cc

52. Consider a spherical satellite of mass m and radius r, held intact by its own gravity, moving in a circular orbit around a planet of mass M and radius R. Consider the following possible critical distance d_R (say), between the planet and the satellite. When the distance d is less than d_R the tidal force on the satellite, which is stretching the satellite along the line from the planet to the satellite, is greater than the self-gravitational force holding the satellite together. Hence if the planet-satellite separation d becomes less than d_R, the satellite disintegrates. Now consider the rotating reference frame in which both the planet and the satellite are stationary with respect to each other. In this frame, at the side of the satellite that is closest to the planet, the tidal acceleration towards the planet is given by $\frac{2GMr}{d^3}$. The magnitude of the acceleration due to self-gravity of the satellite is $\frac{Gm}{r^2}$. The most appropriate value of d_R may be obtained as

(A) $R\left(\frac{2\rho_M}{\rho_m}\right)^{1/3}$

(B) $R\left(\frac{\rho_M}{\rho_m}\right)^{1/3}$

(C) $r\left(\frac{2M}{m}\right)^{1/3}$

(D) $R\left(\frac{2\rho_M}{\rho_m}\right)^{1/2}$

53. Calculus was invented by Newton to solve the equations that came up when he examined motion under a central force such as gravity. The force of gravity is the controlling force underlying the laws of Kepler. The possible solutions to the equation were obtained as conic sections. Which of the following is/are possible solutions (x, y, t, r, θ are standard coordinates; A, B, k and K are constants) to the Kepler problem?

(A) x(t) = A cos kt; y(t) = B sin kt

(B) r(t) = k; θ(t) = K t modulo 2π

(C) x(t) = A sec θ; y(t) = B tan θ

(D) $\frac{(x-2)}{2} = \frac{(y-3)}{3} = \frac{(z-4)}{4}$

54. Consider the functions f and g defined by

f(x) = |x − 1|, x ∈ R and g(x) = |sin x|, x ∈ R. Define the sum of f and g as

(f + g)(x) = f(x) + g(x), x ∈ R and difference of f and g as

(f − g)(x) = f(x) − g(x), x ∈ R

Which of the following is/are true?

(A) f + g is differentiable at x = 0

(B) f − g is not differentiable at x = 0

(C) f + g is not differentiable at x = 1

(D) f − g is differentiable at x = 1

55. Consider the tangents to the curve y = (x − 1)(x − 2)(x − 3) at the points where it meets the X-axis. Which of the following is/are true?

(A) Two of the tangents are parallel to each other

(B) Two of the tangents are perpendicular to each other

(C) One of the tangents makes angle − 45° with the positive X-axis

(D) Sum of the Y-intercepts made by the three tangents is − 6

56. Consider the LPP

Max Z = x + y subject to the constraints

$x + y \le 6, 2x - 3y \le 6, -x + y \le 3, x, y \ge 0$

Which of the following is/are true?

(A) x = 3, y = 3 is a feasible solution of the LPP

(B) x = 3, y = 3 is an optimal solution of the LPP

(C) x = k, y = 6 − k is an optimal solution of the LPP for $1 \le k \le 4$

(D) The LPP has infinitely many optimal solutions

57. There are two whales of exactly the same shape and size. One can just float in a sea somewhat below the arctic circle (say arctic whale) and the other in a tropical sea near the equator (say equatorial whale). Salinity of sea water first increases in going from the equator towards the poles and then decreases in going close to the poles. Which of the following statement(s) is/are true?

(A) The two whales are of the same mass

(B) Equatorial whale has smaller mass

(C) Equatorial whale has larger mass

(D) Arctic whale has more weight

58. A point charge q = 1.00 μC and mass m = 1.00 μg moves in a potential $V(x) = -\frac{a}{x^2} + \frac{b}{x^3}(x > 0)$, where a = 1000 V × μm^2 and b = 100 V × μm^3. The correct statement(s) is/are

(A) There is an equilibrium at x = 0.15 μm

(B) Around x = 0.15 μm, charge can make small oscillations

(C) The period of small oscillations of charge around x = 0.15 is 0.10 ms

(D) A negative charge will not experience zero force at x = 0.15 μm

59. Two bodies are moving under their mutual gravitational force in circular orbits. Their mass ratio is 2:5. The ratio of their

(A) Speeds of the two masses will be in ratio of 5 : 2

(B) Angular speeds around CoM will be in ration of 4 : 25

(C) Angular momenta about the CoM will be 1 : 1

(D) Kinetic energies will be 5 : 2

60. Assume that the Moon's orbit around the Earth is an almost circular ellipse and that neither its orbit nor its rotation axis precesses. From the Earth we can see more than 50 % of the surface of the Moon because

(A) rotation period and revolution period of the Moon are not equal

(B) the Moon's speed of revolution increases and decreases along the elliptical orbit

(C) inclination of the Moon's orbit with the ecliptic plane makes the Moon alternately show more northern or more southern part

(D) other side of the Moon is also visible sometimes

ANSWER KEY

NSEA 2024 · PAPER CODE 41

60
QUESTIONS · 216 MARKS

IAPT final answer key for paper code 41. ★ marks an answer given as per Zigyan.

1	(B)	2	(C)	3	(A)	4	(B)	5	(D)
6	(D)	7	(B)	8	(C)	9	(B)★	10	(C)
11	—★	12	(A)★	13	(C)	14	(C)	15	(A)
16	(B)	17	(A)	18	(D)	19	(B)	20	(A)★
21	(A)	22	(C)	23	(B)	24	(D)	25	(C)
26	(C)	27	(D)	28	(B)	29	(B)	30	(D)
31	(B)	32	(A)	33	(D)	34	(B)★	35	(A)
36	(D)	37	(D)★	38	(C)	39	(A)	40	(C)★
41	(D)	42	(B)	43	(D)	44	(B)	45	(C)
46	(C)	47	(C)	48	(B)	49	(A), (B), (C), (D)	50	(A), (C), (D)
51	(A), (B), (C), (D)★	52	(A), (C)	53	(A), (B), (C), (D)★	54	(B), (C)	55	(A), (C), (D)
56	(A), (B), (D)	57	(B), (D)	58	(A), (B)	59	(A), (D)	60	(B), (C)

★ Answers as per Zigyan

- **Q9** — As per Zigyan: (B); IAPT key (D).
- **Q11** — As per Zigyan: no option is correct; IAPT key (A).
- **Q12** — As per Zigyan: (A); IAPT key (A).
- **Q20** — As per Zigyan: (A); IAPT key (A) or (C).
- **Q34** — As per Zigyan: (B); IAPT key (B).
- **Q37** — As per Zigyan: (D); IAPT key (D).
- **Q40** — As per Zigyan: (C); IAPT key (D).
- **Q51** — As per Zigyan: (A), (B), (C), (D); IAPT key (D).
- **Q53** — As per Zigyan: (A), (B), (C), (D); IAPT key (A), (B), (C), (D).

zigyan

OLYMPIADS · 2026

Olympiad results



TOP ACHIEVEMENT · CHEMISTRY

Qualified the Chemistry Olympiad twice, and selected for the HBCSE camp.

Saksham Bishnoi reached the national stage of the Chemistry Olympiad in two consecutive years and was selected for the Orientation-cum-Selection Camp at HBCSE, Mumbai. 4 Years Classroom - the same student who took AIR 168 in JEE Advanced 2026.

Qualified twice | HBCSE selection camp | Only student from Faridabad

Above MAS means above the **Minimum Admissible Score**: clearing it puts a student in the national band for their subject. It is a real threshold, not a participation marker.

CHEMISTRY · ABOVE MAS



Sulokya Bibhuty
Class XII
3 Years Classroom
Above MAS



Anay Gupta
Class XI
3 Years Classroom
Above MAS



Akshat Khator
Class XI
3 Years Classroom
Above MAS



Harshit Goyal
Class XII
4 Years Classroom
Above MAS



Hardik Sharma
Class XI
3 Years Classroom
Above MAS



Aarush Kumar
Class XII
1 Year Classroom
Above MAS

PHYSICS · ASTRONOMY · MATHEMATICS

PHYSICS



Sulokya Bibhuty
Class XII
3 Years Classroom
Above MAS

PHYSICS



Saksham Bishnoi
Class XII
4 Years Classroom
Above MAS

ASTRONOMY



Sulokya Bibhuty
Class XI
3 Years Classroom
Above MAS

MATHEMATICS · IOQM



Priyanshi
Class XI
4 Years Classroom
IOQM Qualifier

OLYMPIADS WE PREPARE STUDENTS FOR

NSEP	NSEC	NSEB	NSEA	IOQM	NSEJS
Physics	Chemistry	Biology	Astronomy	Mathematics	Class X and below

The olympiad pathway starts in Class 8.

NSEJS is open to Class 10 and below - the habit of staying with one hard problem is the one JEE Advanced rewards.

Zigyan Eduvision Pvt. Ltd. · SCO No. 107, Sector 16, Faridabad 121002
0129-4048800 · +91 92115 38800 · info@zigyan.com

zigyan

RESULTS · 2021 – 2026

Our toppers, year by year

40
JEE Advanced selections in 6 years

AIR 168
best rank — Saksham Bishnoi, 2026

16 of 35
students selected, JEE Advanced 2026

14 of 35
above 98 percentile, JEE Main 2026

JEE ADVANCED SELECTIONS PER YEAR

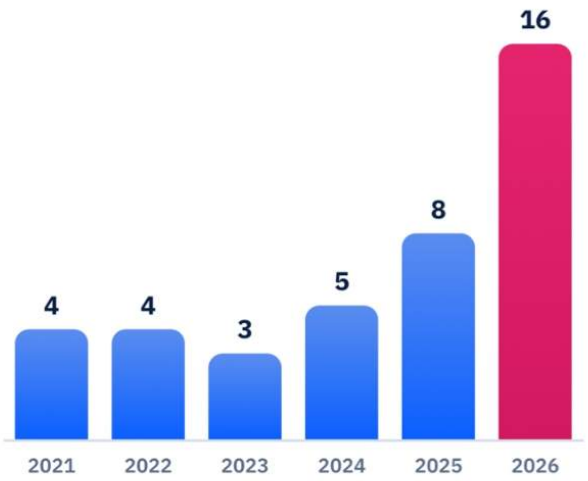

BEST RANK EACH YEAR

YEAR	JEE ADVANCED	JEE MAIN
2026	**Saksham Bishnoi** AIR 168 · 4 Years Classroom	**Saksham Bishnoi** AIR 811 · 99.95 %ile
2025	**Chakshu** AIR 4,233 · 2 Years Classroom	**Chakshu** AIR 8,538 · 99.44 %ile
2024	**Harshit** AIR 777 · 2 Years Classroom	**Harshit** AIR 1,473 · 99.91 %ile
2023	**Aditya Jain** AIR 2,373 · 2 Years Classroom	**Aditya Jain** AIR 2,503 · 99.79 %ile
2022	**Rachit Sharma** AIR 698 · 1 Year Classroom	**Rachit Sharma** AIR 1,016 · 99.90 %ile
2021	**Sparsh Mittal** AIR 2,237 · 1 Year Classroom	**Sparsh Mittal** AIR 1,562

JEE ADVANCED 2026 — THIRTEEN NAMED SELECTIONS



Saksham Bishnoi
AIR 168
4 Years Classroom



Sulokya Bibhuty
AIR 1,315
3 Years Classroom



Aarush
AIR 2,699
1 Year Classroom



Manishka
AIR 2,869
4 Years Classroom



Oojit Kumar
AIR 5,765
4 Years Classroom



Harshit Goyal
AIR 6,407
4 Years Classroom



Pranab Sharma
AIR 6,750
3 Years Classroom



Aditya Dhar
AIR 15,183
3 Years Classroom



Arpit Anshuman
AIR 19,308
4 Years Classroom



Lokesh
AIR 22,857
3 Years Classroom



Arjun
AIR 24,674
3 Years Classroom



Sanyam Gulyani
AIR 25,123
1 Year Classroom



Saket
AIR 27,628
3 Years Classroom

Sixteen students of the 2026 batch were selected in JEE Advanced; the thirteen above are named with their All India Rank.

JEE MAIN 2026 — TOP SIX, WITH PERCENTILE



Saksham Bishnoi
AIR 811
99.95 %ile
4 Years Classroom



Sulokya Bibhuty
AIR 1,095
99.94 %ile
3 Years Classroom



Harshit Goyal
AIR 2,662
99.83 %ile
4 Years Classroom



Manishka
AIR 4,817
99.70 %ile
4 Years Classroom



Oojit Kumar
AIR 5,040
99.69 %ile
4 Years Classroom



Aarush
AIR 5,276
99.67 %ile
1 Year Classroom

14 of the 35 students in the 2026 batch scored above the 98th percentile in JEE Main.

Zigyan Eduvision Pvt. Ltd. · SCO No. 107, Sector 16, Faridabad 121002
0129-4048800 · +91 92115 38800 · info@zigyan.com