zigyan

PREVIOUS YEAR PAPER · 2024

OLYMPIAD · STAGE I

NSEA

National Standard Examination in Astronomy

2024

Question paper, answer key and Zigyan solutions

60	216	120 min	41
Questions	Maximum marks	Time	Paper code

Question paper and official answer key: Indian Association of Physics Teachers (IAPT), NSEA 2024, paper code 41.
Solutions and notes: Zigyan. This booklet is not an IAPT publication.

Prepare for the Olympiads with Zigyan

www.zigyan.com

zigyan

SCO No. 107, Sector 16, Faridabad, Haryana 121002
0129-4048800 · +91 92115 38800 · info@zigyan.com

zigyan

JEE 2026 RESULTS

OUR TOPPERS

When talent meets the right guidance.

Saksham Bishnoi and Sulokya Bibhuty - our JEE 2026 toppers from Zigyan, Sector 16 - with the programme they took and the rank they earned.



Rahul Kaushik Sir
Founder & Director, Zigyan Eduvision
23 years of teaching



Saksham Bishnoi

4 YEARS CLASSROOM

JEE ADVANCED 2026	JEE MAIN 2026
AIR 168	AIR 811
	99.95 percentile



Sulokya Bibhuty

3 YEARS CLASSROOM

JEE ADVANCED 2026	JEE MAIN 2026
AIR 1,315	AIR 1,095
	99.94 percentile

OLYMPIAD RESULTS

Above the Minimum Admissible Score - the national band for the subject

CHEMISTRY

- Sulokya Bibhuty — 3 Years Classroom
- Anay Gupta — 3 Years Classroom
- Akshat Khator — 3 Years Classroom
- Harshit Goyal — 4 Years Classroom
- Hardik Sharma — 3 Years Classroom
- Aarush Kumar — 1 Year Classroom

PHYSICS

- Sulokya Bibhuty — 3 Years Classroom
- Saksham Bishnoi — 4 Years Classroom

ASTRONOMY

- Sulokya Bibhuty — 3 Years Classroom

MATHEMATICS (IOQM)

- Priyanshi — 4 Years Classroom

Saksham Bishnoi qualified the Chemistry Olympiad twice and was selected for the Orientation-cum-Selection Camp at HBCSE, Mumbai.

16 selections	16 of 35	AIR 168
in JEE Advanced 2026	students of the batch selected	best JEE Advanced rank

Start where they started.

Register for ZEST - ₹200 · www.zigyan.com/scholarship/zest

+91 92115 38800
info@zigyan.com

Given in the question paper

Physical constants you may need....

Magnitude of charge on electron $e = 1.60 \times 10^{-19}\,C$	Speed of light in free space $c = 3 \times 10^{8}\ ms^{-1}$
Mass of electron $m_e = 9.11 \times 10^{-31}\,kg$	Speed of sound in dry air at 0°C $v = 332\ ms^{-1}$
Mass of proton $m_p = 1.67 \times 10^{-27}\,kg$	Permittivity of free space $\varepsilon_0 = 8.85 \times 10^{-12}\,C^2/Nm^2$
Mass of neutron $m_n = 1.67 \times 10^{-27}\,kg$	Permeability of free space $\mu_0 = 4\pi \times 10^{-7}\,H/m$
Acceleration due to gravity $g = 9.81\ ms^{-2}$	Planck's constant $h = 6.626 \times 10^{-34}\,Js$
Universal gravitational constant $G = 6.67 \times 10^{-11}\,Nm^2/kg^2$	Rydberg constant $R = 1.097 \times 10^{7}\,m^{-1}$
Universal gas constant $R = 8.31\ J\ /\ mol\ K$	Astronomical unit $= 1.50 \times 10^{11}\,m$
Boltzmann constant $k = 1.38 \times 10^{-23}\,J\ /\ K$	Radius of Sun $R = 6.96 \times 10^{8}\,m$
Stefan's constant $\sigma = 5.67 \times 10^{-8}\,W/m^2K^4$	Mass of Sun $M = 2.0 \times 10^{30}\,kg$
Avogadro's constant $A = 6.022 \times 10^{23}\,mol^{-1}$	Radius of the Earth = 6371 km
Faraday constant $= 96{,}500\ C\ /\ mol$	Mass of the Earth = $5.97 \times 10^{24}\,kg$

PART A-1 · ONE CORRECT OPTION

Q. 1 – 48 · +3 for a correct answer, –1 for a wrong one

1. The energy radiated per second by star A is twice that radiated per second by star B. Also the distance of star A from Earth is twice to that of star B from Earth. Which of the two stars appears brighter when seen from the Earth, and by how much?

(A) Star A appears 2 times brighter than star B
(B) Star B appears 2 times brighter than star A
(C) Star B appears 4 times brighter than star A
(D) The observed brightness of the stars A and B are equal

Solution · Q1 **Answer: (B)**

Apparent brightness of a star,

$$F = \frac{L}{4\pi d^2}$$

$$\frac{F_A}{F_B} = \frac{L_A}{L_B} \times \left(\frac{d_B}{d_A}\right)^2$$

$$\Rightarrow \frac{F_A}{F_B} = 2 \times \left(\frac{1}{2}\right)^2$$

$$\Rightarrow F_B = 2F_A$$

∴ Star B appears 2 times brighter than star A.

IAPT answer: (B) | **Zigyan answer:** (B)

2. How large should the aperture of a telescope be in order to achieve a diffraction limit of 0.001 arc second for visible light of wavelength 500 nm?

(A) 2.4 m (B) 12.6 m (C) 126 m (D) 24 m

Solution · Q2 **Answer: (C)**

For the diffraction limit of a circular aperture,

$$\theta = \frac{1.22\lambda}{D}$$

$$\theta = 0.001 \times \frac{\pi}{180 \times 3600} \text{ rad}$$

$$\Rightarrow \theta \approx 4.85 \times 10^{-9} \text{ rad}$$

$$\Rightarrow D = \frac{1.22 \times 500 \times 10^{-9}}{4.85 \times 10^{-9}} \text{ m}$$

$$\Rightarrow D \approx 126 \text{ m}$$

IAPT answer: (C) | **Zigyan answer:** (C)

3. A nearby star, Alpha Centauri, subtends a parallax angle of 0.7420″. The distance to Alpha Centauri from us is

(A) 1.35 pc (B) 13.5 pc (C) 0.742 pc (D) 7.42 pc

Solution · Q3 **Answer: (A)**

With the parallax p in arc second, the distance in parsec is

$$d = \frac{1}{p}$$

$$\Rightarrow d = \frac{1}{0.7420} \text{ pc}$$

$$\Rightarrow d \approx 1.35 \text{ pc}$$

IAPT answer: (A) | **Zigyan answer:** (A)

4. The spectral lines of two stars in an eclipsing binary system with both stars moving in circular orbits, shift back and forth with a period of 2 years, $T = 6.3 \times 10^7$ second. The lines of one star (star 1) shift twice as far as the lines of the other (star 2). Which one of the following statements is true?

(A) Masses of star 1 and star 2 are equal

(B) Mass of star 2 is twice the mass of star 1

(C) Mass of star 1 is twice the mass of star 2

(D) Nothing can be predicted about the masses of the two stars from the given data

Solution · Q4 **Answer: (B)**

The shift of a spectral line is proportional to the orbital speed of the star.

$$\frac{\Delta\lambda}{\lambda} = \frac{v}{c}$$

$$\Rightarrow v_1 = 2v_2$$

Both stars have the same period T.

$$v = \frac{2\pi r}{T}$$

$$\Rightarrow r_1 = 2r_2$$

About the centre of mass,

$$m_1 r_1 = m_2 r_2$$

$$\Rightarrow m_2 = 2m_1$$

IAPT answer: (B) | **Zigyan answer:** (B)

5. The reciprocal of Hubble's constant, or $1/H_0$, tells us the age of the universe if the expansion rate has remained constant over time. How would the estimated age of the universe differ if the measured value of H_0 were 44 km/s/Mly rather than 22 km/s/Mly?

(A) The estimated age will remain the same
(B) Indeterminate
(C) The estimated age will be twice the current estimated age
(D) The estimated age will be half the current estimated age

Solution · Q5 **Answer: (D)**

For a constant rate of expansion, the age is

$$t = \frac{1}{H_0}$$

H_0 is doubled, from 22 to 44 km/s/Mly.

$$\Rightarrow t' = \frac{t}{2}$$

∴ The estimated age becomes half.

IAPT answer: (D) | **Zigyan answer:** (D)

6. If you live at latitude of 28 degrees North, what is the angle you observe between the northern horizon and North Celestial pole?

(A) 62 degrees (B) 90 degrees (C) 23.5 degrees (D) 28 degrees

Solution · Q6 **Answer: (D)**

The altitude of the North Celestial pole above the northern horizon equals the north latitude of the observer.

∴ The required angle is 28°.

IAPT answer: (D) | **Zigyan answer:** (D)

7. A new planet is discovered to be orbiting a star which has the same mass as our Sun in an approximately circular orbit. The planet orbits the star every 3 months. Approximately, what is the average distance of the planet from the star?

(A) 3 AU (B) 0.4 AU (C) 0.125 AU (D) 1.25 AU

Solution · Q7 **Answer: (B)**

The star has the mass of the Sun. With a in AU and T in years, Kepler's third law gives

$$a^3 = T^2$$

$$T = 0.25 \text{ yr}$$

$$\Rightarrow a = (0.25)^{2/3}$$

$$\Rightarrow a \approx 0.4 \text{ AU}$$

IAPT answer: (B) | **Zigyan answer:** (B)

8. Suppose a future space station orbits the Earth in a circular geosynchronous orbit, 42,000 kilometre from the centre of the Earth. With what speed with respect to Earth, must a spacecraft be launched from this space station so as to escape the Earth?

(A) 11.2 km/s (B) 112 km/s (C) 4.35 km/s (D) 2.45 km/s

Solution · Q8 **Answer: (C)**

To just escape from distance r, the total energy is zero.

$$\frac{1}{2}mv^2 - \frac{GMm}{r} = 0$$

$$\Rightarrow v = \sqrt{\frac{2GM}{r}}$$

$$\Rightarrow v = \sqrt{\frac{2 \times 6.67 \times 10^{-11} \times 5.97 \times 10^{24}}{4.2 \times 10^7}} \text{ m/s}$$

$$\Rightarrow v \approx 4.35 \text{ km/s}$$

IAPT answer: (C) | **Zigyan answer:** (C)

9. Planets orbiting very close to black holes show general relativistic effects; the orbits of such planets are precessing ellipses i.e. the major axis of the ellipse rotates about the occupied focus. A planet is on an elliptical orbit with semi-major axis 1.0 AU around an isolated black hole of one solar mass. A second planet is orbiting the black hole at a distance of 0.3 AU. If observations of this second planet are started when it is closest to the black hole, the minimum length of time over which observations should be carried out so that the precession rate may be ascertained with better accuracy, is a little more than

(A) 30 days (B) 60 days (C) 75 days (D) 90 days

Solution · Q9 **As per Zigyan: (B)**

Taking 0.3 AU as the semi-major axis, Kepler's law around one solar mass gives

$$T^2 = a^3$$

$$\Rightarrow T = (0.3)^{3/2} \text{ yr}$$

$$\Rightarrow T \approx 0.164 \text{ yr}$$

This is about 60 days.

The precession rate follows from the shift of the closest approach from one revolution to the next.

Observation starts at a closest approach, and the next one comes about one period later.

∴ The observation should last a little more than 60 days.

Why Zigyan differs from IAPT: the closest approaches at the start and about 60 days later already give the turn of the major axis, so 90 days is not the minimum.

Reference: NCERT Physics Class XI (Part I), Chapter 7 'Gravitation', section 7.2: the square of the time period of a planet is proportional to the cube of the semi-major axis of its orbit.

Reference: OpenStax Astronomy 2e, section 24.3 'Tests of General Relativity': when the perihelion of Mercury advances, each successive perihelion lies in a slightly different direction as seen from the Sun.

IAPT answer: (D) | **Zigyan answer:** (B)

10. Spectral resolution of a grating is given by $\mathrm{RP} = \frac{\lambda}{\delta\lambda}$ where δλ is the smallest difference in wavelength between two lines that may be resolved as separate at some order after dispersion by the grating. In the binary system consisting of a star and a planet, both the masses orbit around the common centre of mass. The orbital speed of the star will be extremely small due to its comparatively very large mass. The Doppler shift due to this orbital motion will also be extremely small. Doppler spectroscopy is a technique used to detect and estimate the orbital speeds of stars, induced by the presence of exoplanets around them. With what accuracy can the recession speed of a star be determined by simple use of a high resolution spectrograph with RP = 1,00,000 observing a spectral line at 0.3 micron?

(A) 3.0 m/s (B) 30.0 m/s (C) 3.0 km/s (D) 30.0 km/s

Solution · Q10 **Answer: (C)**

The smallest Doppler shift that can be resolved gives the smallest measurable speed.

$$\frac{v}{c} = \frac{\delta\lambda}{\lambda}$$

$$\Rightarrow v = \frac{c}{\mathrm{RP}}$$

$$\Rightarrow v = \frac{3 \times 10^8}{10^5}\ \mathrm{m/s}$$

$$\Rightarrow v = 3.0\ \mathrm{km/s}$$

IAPT answer: (C) | **Zigyan answer:** (C)

11. Fermions (half-integer spin particles) obey the Pauli Exclusion Principle which says that no two fermions can have all physical characteristics (like position, momentum, spin, charge, electron number, muon number etc. ...) the same. As per the uncertainty principle position and momentum can be simultaneously measured only to a precision that satisfies the relation $\Delta x \Delta p_x \geq \frac{\hbar}{2}$. So a 'cell' in phase space (position-momentum space) of size $\left(\frac{\hbar}{2}\right)^3$ can contain only a pair of any one type of neutrino (for example electron neutrino) of opposing spin and all other quantum numbers the same. Consider a spherical dwarf galaxy of a total mass M and radius R consisting of a large amount of dark matter and very little ordinary matter. Suppose dark matter consists of n_f different types of neutrinos all having the same mass m equivalent to 1 eV. Given that the escape speed from the galaxy $v_{esc} = \sqrt{\frac{2GM}{R}}$, a limit may be put on n_f by the relation.

(A) $\dfrac{\left(\frac{4\pi}{3}\right)^2 \left(mv_{esc}R\right)^3}{\left(\frac{\hbar}{2}\right)^3} \times 2n_f \times m < M$

(B) $\dfrac{\left(\frac{4\pi}{3}\right)^2 \left(mv_{esc}R\right)^3}{\left(\frac{\hbar}{2}\right)^3} \times n_f \times m < M$

(C) $\dfrac{\left(\frac{4\pi}{3}\right)^2 \left(mv_{esc}R\right)^3}{\left(\frac{\hbar}{2}\right)^3} \times n_f \times m > M$

(D) No such limit may be extracted

Solution · Q11 — **As per Zigyan: no option is correct**

A bound neutrino has a speed of at most v_{esc}. The available phase space volume is

$$V = \frac{4}{3}\pi R^3 \times \frac{4}{3}\pi \left(mv_{esc}\right)^3$$

Each cell holds 2 neutrinos of each of the n_f types, so the largest possible number of neutrinos is

$$N_{max} = \frac{V}{\left(\frac{\hbar}{2}\right)^3} \times 2n_f$$

The dark matter is nearly the whole mass M, and its neutrinos cannot exceed this number.

$$\therefore N_{max} \times m \geq M$$

$$\Rightarrow \frac{\left(\frac{4\pi}{3}\right)^2 \left(mv_{esc}R\right)^3}{\left(\frac{\hbar}{2}\right)^3} \times 2n_f \times m \geq M$$

This is a lower limit on n_f.

Why Zigyan differs from IAPT: the largest mass allowed by the Pauli principle cannot be smaller than the dark mass actually present. Option (A) reverses this inequality, option (C) omits the factor 2, and option (B) has both faults.

Reference: NCERT Chemistry Class XI (Part I), Unit 2 'Structure of Atom', section 2.6.4: by the Pauli exclusion principle only two electrons can occupy one orbital, and their spins must be opposite.

Reference: Boyarsky, Ruchayskiy and Iakubovskyi, 'A lower bound on the mass of Dark Matter particles', arXiv:0808.3902: the phase space density of fermion dark matter cannot exceed that of a degenerate Fermi gas, and for a galaxy this sets a lower bound on the particle mass.

IAPT answer: (A) | **Zigyan answer:** none of the options is correct

12. Inverse Compton scattering is the scattering of low energy photon by high energy ultra-relativistic charged particle. The photon gains energy and the charged particle loses energy. The frequency of the photon gets multiplied by a factor equal to the square of the Lorentz factor of the ultra-relativistic particle. The low energy photons of the Cosmic Microwave Background (CMB) can be scattered by ultra-relativistic electrons in radio relics in galaxy clusters. If the microwave photons of the CMB (wavelength around 10 cm) get scattered, on the average, into soft X-ray region (wavelength ~ nanometre), the Lorentz factor for the electrons involved is

(A) ~ 10^4 (B) ~ 10^8 (C) ~ 2.73×10^9 (D) ~ 2.73

Solution · Q12 **As per Zigyan: (A)**

Use the two wavelengths given in the question, 1 for the incident and 2 for the scattered photon. The frequency is multiplied by γ^2.

$$\gamma^2 = \frac{\nu_2}{\nu_1}$$
$$\Rightarrow \gamma^2 = \frac{\lambda_1}{\lambda_2}$$
$$\Rightarrow \gamma^2 \approx \frac{0.1}{10^{-9}}$$
$$\Rightarrow \gamma^2 \approx 10^8$$
$$\Rightarrow \gamma \approx 10^4$$

Check: a Lorentz factor of 10^4 raises the frequency 10^8 times, so a 10 cm wave shrinks by the same factor to 1 nm.

IAPT answer: (A) | **Zigyan answer:** (A)

13. The Saha ionization formula gives the ratio of the number of (n + 1) times ionized ions of an element per unit volume to the number of n times ionized ions of the same element in the same volume in a plasma. Normal stars show absorption spectra due to atoms/ions/molecules of the atmosphere of the star in a lower energy state absorbing photons of appropriate energy, from the continuum radiation emitted by the photosphere, to go into a higher energy state. Given the Saha ionization formula as $\log\frac{n_{i+1}}{n_i} = -0.1761 - \log P_e + \log\frac{U_{j+1}(T)}{U_j(T)} + 2.5\log T - \frac{5040E_j}{T}$ where, n_{i+1} is the number density of (i + 1) times ionized ions, n_i is the number density of i times ionized ions, P_e is the electron pressure, $U_.(T)$ is the partition function and E_j is the ionization energy of the j times ionized ion. The ionization energy of hydrogen = 13.54 eV, of first ionization of helium = 24.48 eV and of second ionization of helium = 54.17 eV. As the temperature of photosphere decreases from ~ 50,000 K, in the spectrum

(A) Strength of lines of ionized helium and hydrogen will decrease together

(B) Lines of hydrogen will decrease in strength, helium will increase

(C) Lines of ionized helium will decrease in strength, of helium increase

(D) Strength of hydrogen lines will decrease, ionized helium will increase

Solution · Q13 **Answer: (C)**

By the Saha formula, falling temperature lowers the proportion of higher ions, so ions recombine.

The observed lines of He^+ start from high excited levels that need a very high temperature, so they weaken on cooling.

Neutral helium appears in larger amount, so its lines grow stronger.

Neutral hydrogen also increases on cooling from this temperature, so hydrogen lines strengthen.

∴ only the statement in (C) is correct.

IAPT answer: (C) | **Zigyan answer:** (C)

14. The observed Doppler shift of spectral lines of galaxies is used to determine their velocity of recession from us using the formula v = cz where $z = \frac{\delta\lambda}{\lambda}$ (this may then be used in the Hubble relation v = HD to determine the distance to the galaxy). Spectrometry is expensive since the received light is highly dispersed and only a small number of photons are available in small frequency ranges and so observations have to be integrated over long hours to capture the spectrum. In photometry, light transmitted through various filters (which transmit light in a small band of wavelengths centred on given wavelengths) is measured. Photometry is much cheaper and faster. The hydrogen surrounding galaxies absorb light with wavelength below ~100 nm. Hence the observed brightness of the galaxy will drop drastically below this wavelength of emission. A galaxy was imaged through the u, g, r, i, z filters in the Sloan Digital Sky Survey. The pivot wavelengths of these filters are 354, 477, 623, 763, and 913 nm respectively. A galaxy is visible when imaged through the last three filters. The galaxy 'drops out' and is not visible through the other filters. The redshift of the galaxy as determined by this 'dropout method' lies between

(A) 4.77 and 6.23 (B) 5.77 and 7.23 (C) 3.77 and 5.23 (D) 5.23 and 6.63

Solution · Q14 **Answer: (C)**

The sharp drop in brightness falls between the g and r filters.

Observed wavelength of the break:

$$\lambda = 100(1 + z) \text{ nm}$$

$$\Rightarrow 477 < 100(1 + z) < 623$$

$$\Rightarrow 3.77 < z < 5.23$$

IAPT answer: (C) | **Zigyan answer:** (C)

15. A liquid column of height 1.0 cm and having density 0.8 g/cc, is in a closed container on a horizontal surface inside Chandrayaan-3 Lander on the surface of Moon. The temperature where the landing took place was around 50 ^{0}C. What is the hydrostatic pressure on the bottom of the container? Mass of the Moon = 7×10^{22} kg and radius of the Moon = 1750 km.

Physical constants you may need....

Universal gravitational constant G = 6.67×10^{-11} Nm^2/kg^2

(A) 12.2 N/m^2 (B) 98.0 N/m^2 (C) 78.4 N/m^2 (D) 1.22 N/m^2

Solution · Q15 **Answer: (A)**

Acceleration due to gravity on the Moon:

$$g = \frac{GM}{R^2}$$

$$\Rightarrow g = \frac{6.67 \times 10^{-11} \times 7 \times 10^{22}}{\left(1.75 \times 10^{6}\right)^2}$$

$$\Rightarrow g \approx 1.52 \text{ m s}^{-2}$$

Pressure due to the liquid column:

$$P = \rho gh = 800 \times 1.52 \times 0.01$$

$$\Rightarrow P \approx 12.2 \text{ N/m}^2$$

IAPT answer: (A) | **Zigyan answer:** (A)

16. Cerenkov radiation may be defined as "electromagnetic radiation emitted when a charged particle (such as an electron) passes through a dielectric medium (such as distilled water) at a speed greater than the phase velocity (speed of propagation of a wave front in a medium) of light in that medium". Which of the following cosmic ray particles is likely to be detectable by the recording of the Cerenkov radiation emitted by it in its passage through the Earth's atmosphere. The lower atmosphere near the Earth has a refractive index of 1.002.

Physical constants you may need....

Magnitude of charge on electron $e = 1.60 \times 10^{-19}$ C

Mass of electron $m_e = 9.11 \times 10^{-31}$ kg

Mass of proton $m_p = 1.67 \times 10^{-27}$ kg

Speed of light in free space $c = 3 \times 10^8$ ms^{-1}

(A) A 13 GeV proton
(B) A 13 MeV electron
(C) A 25 MeV proton
(D) A 0.51 MeV electron

Solution · Q16 **Answer: (B)**

For Cerenkov radiation, the particle must be faster than light in air:

$$v/c > 1/1.002$$

Threshold Lorentz factor:

$$\gamma = \frac{1}{\sqrt{1 - \frac{1}{1.002^2}}} \approx 15.8$$

Threshold kinetic energy:

$$K = (\gamma - 1)mc^2$$

Electron:

$$K \approx 14.8 \times 0.511 \text{ MeV} \approx 7.6 \text{ MeV}$$

Proton:

$$K \approx 14.8 \times 938 \text{ MeV} \approx 13.9 \text{ GeV}$$

$\therefore$ only the 13 MeV electron is above its threshold.

IAPT answer: (B) | **Zigyan answer:** (B)

17. Which of the following animals, if they develop their own number system, is likely to write 100 where you count 64?

(A) Spiders (B) Ants (C) Crabs (D) Seahorses

Solution · Q17 **Answer: (A)**

If the number system has base b,

$$(100)_b = b^2$$

$$\Rightarrow b^2 = 64$$

$$\Rightarrow b = 8$$

Counting on limbs, base eight suits spiders, which have eight legs.

IAPT answer: (A) | **Zigyan answer:** (A)

18. The Mercator projection maps the surface of the globe (excluding latitudes close to the two poles) onto a cylinder whose axis coincides with the rotation axis of the globe. The cylinder when cut open with a straight cut parallel to its axis gives a rectangular map which preserves directions. Maps made utilizing this projection are hence used for marine navigation and also by major online street mapping services. On a map of this kind the length of the equator is 40 cm. How many kilometres on the Earth does 1 cm at 60° N latitude on this map correspond to? Assume that the earth is a perfect sphere.

Physical constants you may need....

Radius of the Earth = 6371 km

(A) 866 km (B) 1732 km (C) 1000 km (D) 500 km

Solution · Q18 **Answer: (D)**

Distance on the ground for 1 cm along the equator:

$$\frac{2\pi \times 6371 \text{ km}}{40} \approx 1001 \text{ km}$$

The circle of latitude is shorter than the equator, but on the map both have the same length.

At 60° N, 1 cm therefore corresponds to:

$$1001 \text{ km} \times \cos 60° \approx 500 \text{ km}$$

IAPT answer: (D) | **Zigyan answer:** (D)

19. Five identical letters have to be posted to five different addresses and there are two messengers available. The number of ways in which the letters may be assigned for posting is

(A) 5!/(2!3!) (B) 2^5 (C) 5^2 (D) 6

Solution · Q19 **Answer: (B)**

The letters go to five different addresses, so each one is identified by its address.

Each letter can be given to either of the two messengers.

Number of ways:

$$2 \times 2 \times 2 \times 2 \times 2 = 2^5$$

IAPT answer: (B) | **Zigyan answer:** (B)

20. Consider the ellipse with equation $\frac{x^2}{9}+\frac{y^2}{b}=1$ with one focus at (2, 0). The equation to the line that passes through the point (0, 2) and is perpendicular to the tangent to the ellipse at (x_0, y_0) is

(A) $y=\dfrac{9\left(1-\frac{x_0^2}{9}\right)^{1/2}}{\sqrt{5}\,x_0}x+2$

(B) $y=\dfrac{9}{10x_0}x+2$

(C) $y=-\dfrac{9\sqrt{1-\frac{x_0^2}{9}}}{\sqrt{5}\,x_0}x+2$

(D) $y=-\dfrac{9}{10x_0}x+2$

Solution · Q20 **As per Zigyan: (A)**

For the focus (2, 0):

$$9-b=4$$

$$\Rightarrow b=5$$

Slope of the tangent:

$$m_t=-\frac{5x_0}{9y_0}$$

Slope of the perpendicular line:

$$m=\frac{9y_0}{5x_0}$$

Take the point on the upper half of the ellipse:

$$y_0=\sqrt{5}\sqrt{1-\frac{x_0^2}{9}}$$

Equation of the line through (0, 2):

$$y=\frac{9\sqrt{1-\frac{x_0^2}{9}}}{\sqrt{5}\,x_0}x+2$$

The power one half in (A) is this square root.

Check: at the point (2, 5/3) of this ellipse the tangent has slope −2/3, so the perpendicular has slope 3/2, and option (A) gives the same slope there.

IAPT answer: (A) or (C) | **Zigyan answer:** (A)

21. Consider a planet moving on an elliptical orbit that may be represented by the equation $\frac{x^2}{9}+\frac{y^2}{5}=1$ (in some units) with the parent star at the focus at (−2, 0). The area swept by the radius vector from the focus to the planet in equal intervals of time is a constant. The ratio of the time taken to traverse the portion of the path with x < −2 to the time taken to traverse the portion of the path with x > −2 is

(A) $\frac{\left(\frac{\pi}{2}-A-B\right)}{\left(\frac{\pi}{2}+A+B\right)}$, where $A=\sin^{-1}\frac{2}{3}$ and $B=\frac{2\sqrt{5}}{9}$

(B) $\frac{\left(\frac{\pi}{4}-\alpha-\beta\right)}{\left(\frac{\pi}{4}+\alpha+\beta\right)}$, where $\alpha=\frac{1}{2}\sin^{-1}\frac{2}{3}$ and $\beta=\frac{5}{27}$

(C) 1 : 4

(D) 4 : 1

Solution · Q21 **Answer: (A)**

Time is proportional to the swept area. The star lies on the dividing line:

$$x = -2$$

The ellipse is a circle of radius 3 with every ordinate multiplied by:

$$\frac{\sqrt{5}}{3}$$

For the circular cap beyond this line, the half angle at the centre is θ:

$$\cos\theta = 2/3$$

$$\Rightarrow \theta = \pi/2 - \sin^{-1}(2/3)$$

Elliptical cap, scaled from the circular sector minus the triangle:

$$S_1=\frac{\sqrt{5}}{3}\left(9\theta-2\sqrt{5}\ \right)$$

With A and B as in option (A),

$$\Rightarrow S_1=3\sqrt{5}\left(\frac{\pi}{2}-A-B\right)$$

Rest of the ellipse:

$$S_2=3\sqrt{5}\ \pi-S_1$$

$$\Rightarrow S_2=3\sqrt{5}\left(\frac{\pi}{2}+A+B\right)$$

$$\frac{t_1}{t_2}=\frac{S_1}{S_2}$$

$$\Rightarrow \frac{t_1}{t_2}=\frac{\left(\frac{\pi}{2}-A-B\right)}{\left(\frac{\pi}{2}+A+B\right)}$$

IAPT answer: (A) | **Zigyan answer:** (A)

22. The percentage error in determining $\sin 30^0$ by assuming that between 0^0 and 45^0 the sine function may be approximated by a straight line is

(A) 9.3 % (B) 7.5 % (C) 5.7 % (D) 3.6 %

Solution · Q22 **Answer: (C)**

On the straight line joining the end points, the value at 30° is:

$$y = \frac{30}{45} \times \frac{1}{\sqrt{2}}$$

$$\Rightarrow y \approx 0.4714$$

The true value is 0.5, so the percentage error is:

$$\frac{0.5 - 0.4714}{0.5} \times 100 \approx 5.7\%$$

IAPT answer: (C) | **Zigyan answer:** (C)

23. The relation R on **N**, the set of natural numbers, defined by $(x, y) \in R$ if and only if xy is a perfect square is

(A) reflexive, symmetric but not transitive
(B) reflexive, symmetric and transitive
(C) symmetric but neither reflexive nor transitive
(D) symmetric, transitive but not reflexive

Solution · Q23 **Answer: (B)**

Reflexive, because the following is a perfect square:

$$x \times x = x^2$$

Symmetric, because xy and yx are the same number.

For transitivity, let:

$$xy = a^2 \text{ and } yz = b^2$$

$$\Rightarrow xz = (ab/y)^2$$

A natural number which is the square of a rational number is a perfect square.

$\therefore$ R is also transitive.

IAPT answer: (B) | **Zigyan answer:** (B)

24. If A is a 10 × 10 matrix with determinant 2, what is the determinant of 2A?

(A) 4 (B) 512 (C) 1024 (D) 2048

Solution · Q24 **Answer: (D)**

For a square matrix of order n:

$$\det(kA) = k^n \det A$$

$$\Rightarrow \det(2A) = 2^{10} \times 2$$

$$\Rightarrow \det(2A) = 2048$$

IAPT answer: (D) | **Zigyan answer:** (D)

25. Consider the following system of linear equations:

$kx + y + z = 2023$

$k^2x + ky + z = 2024$

$k^3x + k^2y + z = 2025$

Which of the following is true?

(A) The system has a unique solution for k = 1

(B) The system has a unique solution for any value of k

(C) The system is always inconsistent for any value of k

(D) The system has infinitely many solutions for k = 1

Solution · Q25 **Answer: (C)**

Determinant of the coefficients:

$$\Delta = \begin{vmatrix} k & 1 & 1 \\ k^2 & k & 1 \\ k^3 & k^2 & 1 \end{vmatrix}$$

Column 1 is k times column 2.

$$\Rightarrow \Delta = 0$$

So there is never a unique solution.

$R_2 - kR_1$ gives

$$(1 - k)z = 2024 - 2023k$$

$R_3 - kR_2$ gives

$$(1 - k)z = 2025 - 2024k$$

Subtracting,

$$0 = 1 - k$$

$$\Rightarrow k = 1$$

For this value, the equation from $R_2 - kR_1$ reads

$$0 = 1$$

$\therefore$ The system is inconsistent for every value of k.

IAPT answer: (C) | **Zigyan answer:** (C)

26. The number of real values of x in the closed interval $[0, 2024\pi]$ that satisfy the equation $\sin^2 x + \sin x - 2 = 0$ is

(A) 0 (B) 1 (C) 1012 (D) 2024

Solution · Q26 **Answer: (C)**

$$(\sin x + 2)(\sin x - 1) = 0$$

Since sin x cannot be −2,

$$\sin x = 1$$

$$x = 2m\pi + \frac{\pi}{2}$$

For x in [0, 2024π], the integer m runs from 0 to 1011.

∴ The number of values is 1012.

IAPT answer: (C) | **Zigyan answer:** (C)

27. What is the centre and radius of the circle represented by $\left|\frac{z+1}{z-2}\right| = 2$?

(A) Centre (−1, 2), Radius 2
(B) Centre (1, −2), Radius 2
(C) Centre (0, 3), Radius 2
(D) Centre (3, 0), Radius 2

Solution · Q27 **Answer: (D)**

$$|z + 1| = 2|z - 2|$$

Take x and y as the real and imaginary parts of z, then square.

$$(x + 1)^2 + y^2 = 4[(x - 2)^2 + y^2]$$

$$\Rightarrow x^2 + y^2 - 6x + 5 = 0$$

$$\Rightarrow (x - 3)^2 + y^2 = 4$$

∴ Centre (3, 0), radius 2.

IAPT answer: (D) | **Zigyan answer:** (D)

28. In how many ways can 10 identical balls be distributed among three children?

(A) 30 (B) 66 (C) 120 (D) 156

Solution · Q28 **Answer: (B)**

A child may receive no ball. By the stars and bars method, the number of ways is

$$^{10+3-1}C_{3-1} = {}^{12}C_2$$

$\Rightarrow 66$

IAPT answer: (B) | **Zigyan answer:** (B)

29. Consider the function $f(x) = \begin{cases} 1 + 2x + 3x^2, x \geq 2024 \\ 3 + 2x + x^2, x < 2024 \end{cases}$ Which of the following is **not** correct?

(A) f is discontinuous at x = 2024
(B) f has removable discontinuity at x = 2024
(C) f is continuous at c where c < 2024
(D) f is differentiable at c where c > 2024

Solution · Q29 **Answer: (B)**

At the joining point:

$$LHL = 3 + 2(2024) + 2024^2$$

$$RHL = f(2024) = 1 + 2(2024) + 3(2024)^2$$

$$RHL - LHL = 2(2024)^2 - 2 \neq 0$$

The one-sided limits are unequal, so f has a jump at this point, which cannot be removed.

(A) is true. Each branch is a polynomial, so (C) and (D) are also true.

∴ The incorrect statement is (B).

IAPT answer: (B) | **Zigyan answer:** (B)

30. What is the value of the following limit? $\lim_{n\to\infty}\left(\frac{1}{n^3+1}+\frac{4}{n^3+8}+\frac{9}{n^3+27}+\ldots\ldots+\frac{1}{2n}\right)$

(A) 0 (B) $\ell n\ 2$ (C) $\ell n\ 2^3$ (D) $\ell n\ 2^{1/3}$

Solution · Q30 **Answer: (D)**

The required limit is

$$S=\lim_{n\to\infty}\sum_{r=1}^{n}\frac{r^2}{n^3+r^3}$$

$$=\lim_{n\to\infty}\sum_{r=1}^{n}\frac{1}{n}\frac{\left(\frac{r}{n}\right)^2}{1+\left(\frac{r}{n}\right)^3}$$

As a limit of a sum,

$$S=\int_0^1\frac{x^2}{1+x^3}dx$$

$$\Rightarrow S=\frac{1}{3}\left[\ln\left(1+x^3\right)\right]_0^1$$

$$\Rightarrow S=(1/3)\ln 2=\ln 2^{1/3}$$

IAPT answer: (D) | **Zigyan answer:** (D)

31. The area (arbitrary units) bounded by the curves $y=4|x|$ and $y=x^2|x|$ is

(A) 4 (B) 8 (C) 12 (D) 16

Solution · Q31 **Answer: (B)**

For the points of intersection:

$$4|x|=x^2|x|$$

$$\Rightarrow x=0,\pm 2$$

Between these points the first curve lies above the second, and the region is symmetric about the y-axis.

$$A=2\int_0^2\left(4x-x^3\right)dx$$

$$=2\left[2x^2-\frac{x^4}{4}\right]_0^2$$

$$\Rightarrow A=8$$

IAPT answer: (B) | **Zigyan answer:** (B)

32. Consider the set S of all functions from A = {2021, 2022, 2023, 2024} to itself. What is the probability that a randomly picked function from S is a one-one function?

(A) $\frac{3}{32}$ (B) $\frac{3}{64}$
(C) $\frac{3}{128}$ (D) $\frac{1}{64}$

Solution · Q32 **Answer: (A)**

Total number of functions:

$$4^4 = 256$$

Number of one-one functions:

$$4! = 24$$

Required probability:

$$P = \frac{24}{256} = \frac{3}{32}$$

IAPT answer: (A) | **Zigyan answer:** (A)

33. Auroral Kilometric Radiation occurs due to emission from charged particles moving in helical paths around planetary magnetic field lines at or around the electron gyro frequency and/or its lower harmonics. Considering the emission from relativistic particles, the emission peaks around a frequency ~ $\gamma^2 \upsilon_c$ where γ, the Lorentz factor is $\gamma = \frac{1}{\sqrt{\left(1-\left(\frac{v}{c}\right)^2\right)}}$ and the cyclotron frequency is $\upsilon_c = \frac{eB}{2\pi m}$.

Determine the frequency of peak emission by electrons moving at one-third the speed of light near the Earth's poles. The average strength of the Earth's magnetic field (which is approximately a dipole) at its surface is 50 μTesla. It varies from about 25 μTesla to 65 μTesla over the surface.

Physical constants you may need....

Magnitude of charge on electron e = 1.60×10^{-19} C

Mass of electron $m_e = 9.11 \times 10^{-31}$ kg

(A) 1.78×10^{12} Hz (B) 1.89 MHz (C) 2×10^{12} Hz (D) 2 MHz

Solution · Q33 **Answer: (D)**

For electrons at one-third the speed of light:

$$\gamma^2 = \frac{1}{1-\frac{1}{9}} = \frac{9}{8}$$

A dipole field is strongest at the poles, so take B there as the upper value, 65 μT.

$$\upsilon_c = \frac{1.60 \times 10^{-19} \times 65 \times 10^{-6}}{2\pi \times 9.11 \times 10^{-31}}$$

$$\Rightarrow \upsilon_c \approx 1.82 \text{ MHz}$$

Peak frequency:

$$\gamma^2 \upsilon_c = \frac{9}{8} \times 1.82 \text{ MHz}$$

$$\Rightarrow \gamma^2 \upsilon_c \approx 2.04 \text{ MHz}$$

∴ The emission peaks at about 2 MHz.

IAPT answer: (D) | **Zigyan answer:** (D)

34. Thermal diffusivity of a material is related to the speed with which thermal equilibrium is reached. Thermal diffusivity $a = \frac{k}{\rho c}$ where k is the thermal conductivity, ρ is the density and c is the specific heat capacity of the material. Vessel of thick walls and bottom, made of which of the following metals/alloys aluminium (k = 385 W/m.K; ρ = 2.7 g/cc; c = 0.9 J/g.^{0}C all at room temperature) or copper (k = 205 W/m.K; ρ = 8.96 W/m.K; c = 0.385 J/g.^{0}C) or steel (k = 50.2 W/m.K; ρ = 7.75 W/m.K; c = 0.42 J/g.^{0}C) is more likely to develop cracks if cold water is suddenly poured in after the vessel has been heated to 400 kelvin. The other conditions like size, shape and thickness of the walls and the bottom of the vessels remaining the same.

(A) Aluminium
(B) Steel
(C) Copper
(D) All the three equally likely

Solution · Q34 **As per Zigyan: (B)**

With low thermal diffusivity, sudden cooling leaves a large temperature difference across the thick wall, causing large thermal stress.

The densities are in g/cc; the unit W/m.K printed with two of them is a misprint. The printed values in SI units give, in m^2/s:

$$a_{A\ell} = \frac{385}{2700 \times 900}$$

$$\Rightarrow a_{A\ell} \approx 1.58 \times 10^{-4}$$

$$a_{copper} = \frac{205}{8960 \times 385}$$

$$\Rightarrow a_{copper} \approx 5.94 \times 10^{-5}$$

$$a_{steel} = \frac{50.2}{7750 \times 420}$$

$$\Rightarrow a_{steel} \approx 1.54 \times 10^{-5}$$

The printed conductivities of aluminium and copper are interchanged; steel has the least diffusivity either way.

∴ The steel vessel is the most likely to crack.

Reference: NCERT Physics Class XI (Part II), Chapter 10 'Thermal Properties of Matter', section 10.9.1, Table 10.6: thermal conductivity in W m^{-1} K^{-1} is 385 for copper, 205 for aluminium and 50.2 for steel.

Check: With these table values and the printed densities and specific heats, the diffusivity is about 8.4 × 10^{-5} m^2/s for aluminium and 1.1 × 10^{-4} m^2/s for copper, both far above that of steel.

IAPT answer: (B) | **Zigyan answer:** (B)

35. At the interface between two media which are transparent to the incident light, specular reflection with angle of reflection equal to angle of incidence will take place if surface irregularities are small (scale of micro-roughness less < $\frac{1}{100}$ times the wavelength of incident light). Reflectance ρ is the fraction of the incident intensity that is reflected. For light going from a rarer medium to a denser one

$\rho_{par} = \left(\frac{n^2\cos\theta - \sqrt{(n^2 - \sin^2\theta)}}{n^2\cos\theta + \sqrt{(n^2 - \sin^2\theta)}} \right)^2$ and $\rho_{per} = \left(\frac{\cos\theta - \sqrt{(n^2 - \sin^2\theta)}}{\cos\theta + \sqrt{(n^2 - \sin^2\theta)}} \right)^2$ are the reflectances

respectively for radiation polarized parallel to the interface and perpendicular to that. Here, n is the refractive index of medium two with respect to medium one. For unpolarised light ρ is the mean of ρ_{par} and ρ_{per}; it is a monotonic function of the angle of incidence θ. Headlights of a faraway car coming towards you are getting reflected off the wet road into your eyes. The emission cone of light is narrow. The brightness of the reflection will be

(A) greatest when car is farther away
(B) independent of distance
(C) greatest when car is nearer
(D) increases continuously

Solution · Q35 **Answer: (A)**

The mean reflectance rises steadily with the angle of incidence, from a small value at normal incidence to 1 at grazing incidence.

For lamp height h_1, eye height h_2 and horizontal separation s, specular reflection needs

$$\tan\theta = \frac{s}{h_1 + h_2}$$

A farther car means θ nearer 90°, so a larger fraction is reflected.

For a headlight aimed along the road, the ray needed is then nearly level, so it lies inside the narrow cone.

∴ The reflection is brightest when the car is farther away.

IAPT answer: (A) | **Zigyan answer:** (A)

36. Light from a sodium vapour lamp is diffracted by a plane transmission diffraction grating with N = 4000 lines per cm. The light is incident normally on the grating placed in air. The maximum angular separation (in minute of arc) achieved between the sodium doublets?

(A) 0.014’ (B) 0.029’ (C) 0.155’ (D) 9.9’

Solution · Q36 **Answer: (D)**

Grating element:

$$d = \frac{1\text{ cm}}{4000} = 2500\text{ nm}$$

The sodium D lines are at 589.0 nm and 589.6 nm.

At normal incidence,

$$d \sin\theta = m\lambda$$

$$\Rightarrow m \leq 2500/589.6 \approx 4.24$$

The separation is greatest in the highest order, the fourth.

$$\sin\theta_1 = 4 \times 589.0/2500 = 0.9424$$

$$\sin\theta_2 = 4 \times 589.6/2500 = 0.94336$$

$$\Rightarrow \theta_1 \approx 70.46^\circ, \theta_2 \approx 70.62^\circ$$

$$\Rightarrow \Delta\theta \approx 0.165^\circ \approx 9.9'$$

IAPT answer: (D) | **Zigyan answer:** (D)

37. A proton with kinetic energy 1 keV is shot at a static uranium nucleus. The radius of the uranium nucleus is approximately 15 femto-meter, the range of the strong force is of the order of a femto-meter and the impact parameter is 50 femto-meter. The angular momentum of the proton with respect to the centre of the Uranium nucleus in units of the reduced Planck's constant ($\hbar$) is

Physical constants you may need....

Magnitude of charge on electron e = 1.60×10^{-19} C

Mass of proton $m_p = 1.67 \times 10^{-27}$ kg

Planck's constant h = 6.626×10^{-34} Js

(A) 6.96 (B) 55.2 (C) 1.04 (D) 0.346

Solution · Q37 **As per Zigyan: (D)**

Angular momentum about the centre is conserved, so use its value far from the nucleus. With impact parameter b,

$$L = pb = b\sqrt{2m_pK}$$

$$K = 1 \text{ keV} = 1.60 \times 10^{-16} \text{ J}$$

$$L = 50 \times 10^{-15} \times \sqrt{2 \times 1.67 \times 10^{-27} \times 1.60 \times 10^{-16}}$$

$$\Rightarrow L \approx 3.655 \times 10^{-35} \text{ J s}$$

$$\hbar = \frac{h}{2\pi} \approx 1.055 \times 10^{-34} \text{ J s}$$

$$\therefore L/\hbar \approx 0.346$$

The nuclear radius and the range of the strong force do not enter.

Reference: NCERT Physics Class XI (Part I), Chapter 6 'Systems of Particles and Rotational Motion', section 6.7.2: the angular momentum of a particle has magnitude equal to its momentum times the perpendicular distance of the line of that momentum from the origin.

IAPT answer: (D) | **Zigyan answer:** (D)

38. In quantum mechanics the wave function carries all the information about the system. The spin part of the general state of a spin half particle, with spin pointing in the (θ, ϕ) direction in three dimensional space can be written down in matrix form as $|\alpha> = \begin{pmatrix} \cos\frac{\theta}{2} \\ e^{i\varphi}\sin\frac{\theta}{2} \end{pmatrix}$. The scalar product between two vectors $|\lambda>$ and $|\rho>$ is given by $<\lambda||\rho>$ where $<\lambda|$ stands for the complex conjugate transpose of $|\lambda>$. The vector orthogonal to $|\alpha>$ is

(A) $\begin{pmatrix} \sin\frac{\theta}{2} \\ -e^{-i\varphi}\cos\frac{\theta}{2} \end{pmatrix}$ (B) $\begin{pmatrix} \cos\frac{\theta}{2} \\ -e^{-i\varphi}\sin\frac{\theta}{2} \end{pmatrix}$

(C) $\begin{pmatrix} \sin\frac{\theta}{2} \\ -e^{i\varphi}\cos\frac{\theta}{2} \end{pmatrix}$ (D) $\begin{pmatrix} \cos\frac{\theta}{2} \\ -e^{i\varphi}\sin\frac{\theta}{2} \end{pmatrix}$

Solution · Q38 **Answer: (C)**

For the required vector $|\beta>$,

$$<\alpha|\beta> = 0$$

The conjugate transpose is

$$<\alpha| = \left(\cos\frac{\theta}{2}, e^{-i\varphi}\sin\frac{\theta}{2}\right)$$

For the vector in (C),

$$<\alpha|\beta> = \cos(\theta/2)\sin(\theta/2) - e^{-i\Phi}e^{i\Phi}\sin(\theta/2)\cos(\theta/2)$$

$$\Rightarrow <\alpha|\beta> = 0$$

IAPT answer: (C) | **Zigyan answer:** (C)

39. The value of $\frac{h}{e^2}$ in SI units is

Physical constants you may need....

Magnitude of charge on electron e = 1.60×10^{-19} C

Planck's constant h = 6.626×10^{-34} Js

(A) 25.9 kΩ (B) 259 kV (C) 25.9 kJ/C^2 (D) 259 kJ/A^2

Solution · Q39 **Answer: (A)**

$$\frac{h}{e^2} = \frac{6.626 \times 10^{-34}}{\left(1.60 \times 10^{-19}\right)^2}$$

$\Rightarrow h/e^2 \approx 2.59 \times 10^4$ SI units

Unit:

$$\frac{Js}{C^2} = \frac{J/C}{C/s} = \frac{V}{A} = \Omega$$

$$\therefore h/e^2 \approx 25.9\ k\Omega$$

IAPT answer: (A) | **Zigyan answer:** (A)

40. Three identical convex lenses of focal length f have been placed with common principal axis along the X axis. The separation between two adjacent lenses is f. A laser beam is made incident parallel to principal axis. If the middle lens is now slightly shifted along –ve y direction, the emergent rays from the third lens will

(A) shift upward in the +ve y direction and stay parallel to principal axis

(B) move upward

(C) shift downward in the –ve y direction and stay parallel to principal axis

(D) move downward

Solution · Q40 **As per Zigyan: (C)**

The first lens focuses the beam in the plane of the middle lens.

Let that lens move down by d.

A thin lens does not displace rays in its own plane, so they still cross there.

That point is the first principal focus of the third lens, so the rays emerge parallel to the axis.

The ray along the X axis heads for the second focus of the shifted lens, in the third lens's plane, at

$$y = -d$$

∴ The beam shifts downward by d, staying parallel to the principal axis.

Why Zigyan differs from IAPT: every ray reaches the third lens through its first principal focus, so the emergent beam cannot be inclined; it is only displaced downward.

Reference: NCERT Physics Class XII (Part II), Chapter 9 'Ray Optics and Optical Instruments', section 9.5.2: for a convex lens, a ray parallel to the principal axis goes through the second principal focus, and a ray through the first principal focus emerges parallel to the principal axis.

IAPT answer: (D) | **Zigyan answer:** (C)

41. Consider a coil of inductance 22.4 mH is connected in series with a capacitor 22.4 μF. The coil has resistance 22.4 Ω. This combination is connected to an AC source of 224 Hz, rms 22.4 V sinusoidal signal. The rms current in the circuit will be

(A) 262 mA (B) 354 mA (C) 501 mA (D) 1000 mA

Solution · Q41 **Answer: (D)**

$$X_L = 2\pi f L \approx 31.5\ \Omega$$

$$X_C = \frac{1}{2\pi f C} \approx 31.7\ \Omega$$

$$Z = \sqrt{R^2 + (X_L - X_C)^2} \approx 22.4\ \Omega$$

$$I_{rms} = \frac{22.4}{22.4} \approx 1\ A$$

$$\therefore I_{rms} \approx 1000\ mA$$

IAPT answer: (D) | **Zigyan answer:** (D)

42. A proton moving with speed of 20 km/s enters a 200 cm long and 2.0 cm radius solenoid close to its axis. Solenoid has magnetic field of 200 gauss. If it leaves from the other end of the solenoid in 200 μs, how many revolutions can it complete (approximately) while inside the solenoid, (neglect end effects)?

Physical constants you may need....

Magnitude of charge on electron e = 1.60×10^{-19} C

Mass of proton $m_p = 1.67 \times 10^{-27}$ kg

(A) 20 (B) 61 (C) 102 (D) 122

Solution · Q42 **Answer: (B)**

Period of the circular motion:

$$T = \frac{2\pi m}{qB} = \frac{2\pi \times 1.67 \times 10^{-27}}{1.60 \times 10^{-19} \times 0.02}$$

$$\Rightarrow T \approx 3.28 \times 10^{-6}\ \text{s}$$

Number of revolutions:

$$N = \frac{200 \times 10^{-6}}{3.28 \times 10^{-6}} \approx 61$$

IAPT answer: (B) | **Zigyan answer:** (B)

43. Four charges are placed at points whose cartesian coordinates are +Q(−a, −a, 0), −Q(−a, a, 0), +Q(a, a, 0) and −Q(a, −a, 0). The number of neutral points where electric field is zero is:

(A) zero (B) one (C) four (D) infinite

Solution · Q43 **Answer: (D)**

Every point (0, 0, z) is equidistant from all four charges, at distance

$$r = \sqrt{2a^2 + z^2}$$

The two +Q charges are diagonally opposite. Their resultant field is along the z axis:

$$E_+ = \frac{2kQz}{r^3}$$

The two −Q charges give an equal and opposite field. So on the axis,

$$E = 0$$

This holds at every point of the z axis, so there are infinitely many neutral points.

IAPT answer: (D) | **Zigyan answer:** (D)

44. Stars emit radiation approximately like perfectly black bodies. The amount of light energy emitted per unit time is called the luminosity of the star. Luminosity L and radius R of main sequece stars whose masses are neither too high nor too low are related to mass m of star as $L \propto m^{3.5}$ and $R \propto m^{0.8}$. The surface temperature T depends on the mass as

(A) $T \propto m^{-2.1}$ (B) $T \propto m^{0.475}$ (C) $T \propto m^{1.1}$ (D) $T \propto m^{1.275}$

Solution · Q44 **Answer: (B)**

By Stefan's law,

$$L \propto R^2 T^4$$

$$T^4 \propto \frac{L}{R^2}$$

$$\Rightarrow T^4 \propto m^{3.5-1.6} = m^{1.9}$$

$$\therefore T \propto m^{0.475}$$

IAPT answer: (B) | **Zigyan answer:** (B)

45. A box of 22.4 litre is filled with ideal gas at pressure 2.00 atm and temperature 300 K. The box is opened in vacuum chamber of volume 44.8 litres. The final temperature of the gas will be

(A) 150 K (B) 200 K (C) 300 K (D) 450 K

Solution · Q45 **Answer: (C)**

Free expansion into vacuum, with no heat exchange:

$$W = 0 \text{ and } Q = 0$$

$$\Rightarrow \Delta U = 0$$

For an ideal gas, U depends only on temperature.

$$\therefore T = 300 \text{ K}$$

IAPT answer: (C) | **Zigyan answer:** (C)

46. If the density of a planet is varying with radius as $\rho(r) = \rho_0\left(1 - \left(\frac{r}{R}\right)^2\right)$, its gravity will be maximum at

(A) $r = \frac{5}{9}R$ (B) $r = \frac{3}{5}R$

(C) $r = \frac{\sqrt{5}}{3}R$ (D) $r = \left(\frac{5}{9}R\right)^{3/2}$

Solution · Q46 **Answer: (C)**

Mass inside radius r:

$$M(r) = 4\pi\rho_0\left(\frac{r^3}{3} - \frac{r^5}{5R^2}\right)$$

Gravity at this radius:

$$g = \frac{GM}{r^2} = 4\pi G\rho_0\left(\frac{r}{3} - \frac{r^3}{5R^2}\right)$$

For maximum gravity,

$$\frac{dg}{dr} = 0$$

$$\Rightarrow \frac{1}{3} - \frac{3r^2}{5R^2} = 0$$

$$\Rightarrow r = \frac{\sqrt{5}}{3}R$$

IAPT answer: (C) | **Zigyan answer:** (C)

47. In the following circuit, voltmeter has 40 kΩ resistance and ammeter has 40 Ω resistance. Their readings are 4.00 V and 40.0 mA respectively. The actual values if the meters were ideal would be

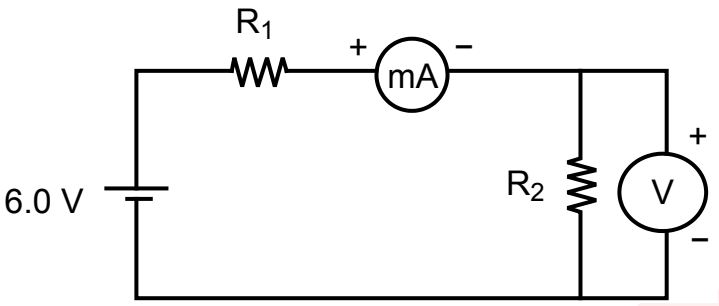

(A) Larger than 4.00V, smaller than 40.0 mA
(B) Smaller than 4.00V, smaller than 40.0 mA
(C) Larger than 4.00V, larger than 40.0 mA
(D) Smaller than 4.00V, larger than 40.0 mA

Solution · Q47 **Answer: (C)**

Voltmeter current:

$$I_V = \frac{4.00}{40000}\,A = 0.1\,mA$$

$$R_2 = \frac{4.00}{39.9 \times 10^{-3}} \approx 100.25\,\Omega$$

For the loop:

$$6.0 = 0.040\,(R_1 + 40) + 4.00$$

$$\Rightarrow R_1 = 10\,\Omega$$

With ideal meters:

$$I = \frac{6.0}{10 + 100.25} \approx 54.4\,mA$$

$$V = IR_2 \approx 5.46\,V$$

Both values are larger than the readings.

IAPT answer: (C) | **Zigyan answer:** (C)

48. If an atom absorbs red photon of 650 nm and a yellow photon of 580 nm and emits the entire absorbed energy as a single photon, the wavelength of the emitted photon is

(A) 70.5 nm (B) 306.5 nm (C) 613 nm (D) 1230 nm

Solution · Q48 **Answer: (B)**

By conservation of energy,

$$\frac{hc}{\lambda} = \frac{hc}{650} + \frac{hc}{580}$$

$$\Rightarrow \frac{1}{\lambda} = \frac{1}{650} + \frac{1}{580}$$

$$\Rightarrow \lambda = \frac{650 \times 580}{1230} \approx 306.5\,nm$$

IAPT answer: (B) | **Zigyan answer:** (B)

PART A-2 · ONE OR MORE CORRECT OPTIONS

Q. 49 – 60 · 6 marks only if all correct options are marked · no negative marking

49. A spectrometer can be used for

(A) determining the wavelength of different lines seen in the spectrum

(B) determining the extent to which specific spectral lines are Doppler shifted

(C) determining the elements present in the atmosphere of a star

(D) ascertaining the physical properties of the outer cooler layers of a star

Solution · Q49 **Answer: (A), (B), (C), (D)**

(A) Line positions give the wavelengths.

(B) The shift from the laboratory wavelength gives the Doppler shift.

(C) The line wavelengths identify the elements in the stellar atmosphere.

(D) Absorption lines form in the cooler outer layers; their strengths and widths show the physical conditions there.

∴ All four are true.

IAPT answer: (A), (B), (C), (D) | **Zigyan answer:** (A), (B), (C), (D)

50. Choose all the correct statements pertaining to Earth

(A) Winter in Southern hemisphere is longer than winter in Northern hemisphere

(B) The Earth moves fastest in its orbit during summer in Northern hemisphere

(C) The Earth is closest to the Sun in January

(D) The orbit of the Earth is farthest from the Sun close to the summer solstice in the Northern hemisphere

Solution · Q50 **Answer: (A), (C), (D)**

The Earth is at perihelion in early January and at aphelion in early July.

By Kepler's second law, it moves fastest in January and slowest in July.

(A) True: southern winter (June to September) falls near aphelion and lasts longer (about 94 days) than northern winter (about 89 days).

(B) False: northern summer is near aphelion.

(C) True.

(D) True: aphelion comes about two weeks after the June solstice.

IAPT answer: (A), (C), (D) | **Zigyan answer:** (A), (C), (D)

51. A gas cloud will collapse under self-gravity if the expansive force due to gas pressure is insufficient to counter the self-gravitational force. Such collapse and condensation can lead to the formation of stars. One way of expressing the situation is to note that collapse can take place if the travel time of sound (speed of sound is ~ rms speed of the gas molecules) across the cloud is more than the free fall time of the cloud under its own gravity. The condition for collapse may be specified as

(i) The radius of the cloud > Jeans length $= R_J = \frac{c_s}{(G\rho)^{1/2}} = \left(\frac{15k_BT}{4\pi G\mu\rho}\right)^{1/2}$ or

(ii) The mass of the cloud > Jeans mass $= \frac{4\pi}{3}R_J^3\rho$, which works out as $3\times10^4\left(\frac{T^3}{n}\right)^{1/2}$ in units of solar mass.

Here, μ is the mean molecular mass of the particles of the cloud, ρ is the density, n is the number density i.e. the number of particles per cc and T is the temperature of the cloud.

Physical constants you may need....

Mass of proton $m_p = 1.67 \times 10^{-27}$ kg

Universal gravitational constant $G = 6.67 \times 10^{-11}$ Nm^2/kg^2

Boltzmann constant $k = 1.38 \times 10^{-23}$ J / K

Mass of Sun $M = 2.0 \times 10^{30}$ kg

Which of the following interstellar molecular hydrogen clouds are unstable to collapse?

(A) Giant molecular cloud of mass 10^4 solar masses, with n = 100 per cc and T = 20 K

(B) Molecular cloud core of mass 10 solar masses, with $n = 10^5$ per cc and T = 10 K

(C) Molecular cloud core of mass equal to 1 solar mass, radius 0.001 pc and T = 10 K

(D) A molecular cloud core of radius 10 pc, temperature 10 K with $n = 10^4$ per cc

Solution · Q51 **As per Zigyan: (A), (B), (C), (D)**

For molecular hydrogen, with n per cc:

$$\rho = 2m_p \times 10^6\, n$$

From the definitions in (i) and (ii):

$$M_J = \frac{4\pi\rho}{3}\left(\frac{15kT}{8\pi G m_p \rho}\right)^{3/2}$$

$$\Rightarrow M_J \approx 23\sqrt{\frac{T^3}{n}}M_s$$

M_s is the solar mass.

(A) $M_J \approx 206\ M_s < 10^4\ M_s$

(B) $M_J \approx 2.3\ M_s < 10\ M_s$

(C) Taking 1 pc as 3.086×10^{16} m:

$$n \approx 4.9 \times 10^9\ cm^{-3}$$

$$M_J \approx 0.01\ M_s < 1\ M_s$$

(D) Cloud mass M_c and Jeans mass:

$$M_c \approx 2.1 \times 10^6\ M_s$$

$$M_J \approx 7.3\ M_s$$

$\therefore$ All four collapse.

Why Zigyan differs from IAPT: the factor 3×10^4 has the size obtained when n is counted per cubic metre. With n per cc, the question's own definitions give about 23, so (A), (B) and (C) collapse too.

Check: in every cloud, sound needs longer than the free-fall time to cross even one radius; this is the collapse condition stated in the question.

IAPT answer: (D) | **Zigyan answer:** (A), (B), (C), (D)

52. Consider a spherical satellite of mass m and radius r, held intact by its own gravity, moving in a circular orbit around a planet of mass M and radius R. Consider the following possible critical distance d_R (say), between the planet and the satellite. When the distance d is less than d_R the tidal force on the satellite, which is stretching the satellite along the line from the planet to the satellite, is greater than the self-gravitational force holding the satellite together. Hence if the planet-satellite separation d becomes less than d_R, the satellite disintegrates. Now consider the rotating reference frame in which both the planet and the satellite are stationary with respect to each other. In this frame, at the side of the satellite that is closest to the planet, the tidal acceleration towards the planet is given by $\frac{2GMr}{d^3}$. The magnitude of the acceleration due to self-gravity of the satellite is $\frac{Gm}{r^2}$. The most appropriate value of d_R may be obtained as

(A) $R\left(\frac{2\rho_M}{\rho_m}\right)^{1/3}$

(B) $R\left(\frac{\rho_M}{\rho_m}\right)^{1/3}$

(C) $r\left(\frac{2M}{m}\right)^{1/3}$

(D) $R\left(\frac{2\rho_M}{\rho_m}\right)^{1/2}$

Solution · Q52 **Answer: (A), (C)**

At the critical distance, tidal acceleration equals self-gravity:

$$\frac{2GMr}{d_R^3} = \frac{Gm}{r^2}$$

$$\Rightarrow d_R = r\left(\frac{2M}{m}\right)^{1/3}$$

Using the mean densities of the planet and the satellite:

$$\frac{M}{m} = \frac{\rho_M R^3}{\rho_m r^3}$$

$$\Rightarrow d_R = R\left(\frac{2\rho_M}{\rho_m}\right)^{1/3}$$

IAPT answer: (A), (C) | **Zigyan answer:** (A), (C)

53. Calculus was invented by Newton to solve the equations that came up when he examined motion under a central force such as gravity. The force of gravity is the controlling force underlying the laws of Kepler. The possible solutions to the equation were obtained as conic sections. Which of the following is/are possible solutions (x, y, t, r, θ are standard coordinates; A, B, k and K are constants) to the Kepler problem?

(A) $x(t) = A \cos kt$; $y(t) = B \sin kt$

(B) $r(t) = k$; $\theta(t) = K\,t$ modulo 2π

(C) $x(t) = A \sec \theta$; $y(t) = B \tan \theta$

(D) $\frac{(x-2)}{2} = \frac{(y-3)}{3} = \frac{(z-4)}{4}$

Solution · Q53 — **As per Zigyan: (A), (B), (C), (D)**

Take an inverse-square pull towards a fixed body of mass M; constants may be chosen suitably.

(A) With B equal to A: uniform motion on a circle about this body, when

$$k^2A^3 = GM$$

(B) Uniform circular motion, when

$$K^2k^3 = GM$$

(C) With θ as a parameter, an unbound hyperbolic orbit with the body at a focus:

$$\frac{x^2}{A^2} - \frac{y^2}{B^2} = 1$$

(D) Adding 1 to each ratio:

$$\frac{x}{2} = \frac{y}{3} = \frac{z}{4}$$

This line passes through the origin: radial motion, with the body there.

Reference: NCERT Physics Class XI (Part I), Chapter 7 'Gravitation', section 7.2: planets move in ellipses with the Sun at a focus; a circle is a special ellipse.

Reference: OpenStax University Physics Volume 1, section 13.5 'Kepler's Laws of Planetary Motion': every such path is a conic section; parabolas and hyperbolas are unbound orbits.

Check: for (D), a body moving along a line through the attracting body is pulled only along that line, so it stays on it.

IAPT answer: (A), (B), (C), (D) | **Zigyan answer:** (A), (B), (C), (D)

54. Consider the functions f and g defined by

$f(x) = |x - 1|$, $x \in R$ and $g(x) = |\sin x|$, $x \in R$. Define the sum of f and g as

$(f + g)(x) = f(x) + g(x)$, $x \in R$ and difference of f and g as

$(f - g)(x) = f(x) - g(x)$, $x \in R$

Which of the following is/are true?

(A) f + g is differentiable at x = 0

(B) f − g is not differentiable at x = 0

(C) f + g is not differentiable at x = 1

(D) f − g is differentiable at x = 1

Solution · Q54 — **Answer: (B), (C)**

At the origin, $|x - 1|$ is differentiable but $|\sin x|$ is not.

So neither f + g nor f − g is differentiable there: (A) false, (B) true.

Where x is 1, $|\sin x|$ is differentiable but $|x - 1|$ is not.

So neither f + g nor f − g is differentiable there: (C) true, (D) false.

IAPT answer: (B), (C) | **Zigyan answer:** (B), (C)

55. Consider the tangents to the curve $y = (x - 1)(x - 2)(x - 3)$ at the points where it meets the X-axis. Which of the following is/are true?

(A) Two of the tangents are parallel to each other

(B) Two of the tangents are perpendicular to each other

(C) One of the tangents makes angle $-45°$ with the positive X-axis

(D) Sum of the Y-intercepts made by the three tangents is -6

Solution · Q55 **Answer: (A), (C), (D)**

The curve meets the X-axis where x is 1, 2 or 3.

$$y' = (x - 2)(x - 3) + (x - 1)(x - 3) + (x - 1)(x - 2)$$

The slopes there are 2, −1 and 2.

Tangents:

$$y = 2x - 2$$

$$y = -x + 2$$

$$y = 2x - 6$$

(A) True: two slopes are equal.

(B) False: no two slopes have product −1.

(C) True: slope −1 gives −45°.

(D) True, since the intercepts add as:

$$-2 + 2 - 6 = -6$$

IAPT answer: (A), (C), (D) | **Zigyan answer:** (A), (C), (D)

56. Consider the LPP

Max $Z = x + y$ subject to the constraints

$x + y \le 6$, $2x - 3y \le 6$, $-x + y \le 3$, $x, y \ge 0$

Which of the following is/are true?

(A) $x = 3, y = 3$ is a feasible solution of the LPP

(B) $x = 3, y = 3$ is an optimal solution of the LPP

(C) $x = k, y = 6 - k$ is an optimal solution of the LPP for $1 \le k \le 4$

(D) The LPP has infinitely many optimal solutions

Solution · Q56 **Answer: (A), (B), (D)**

(A) True: (3, 3) satisfies every constraint.

(B) True: the first constraint limits Z to 6, attained at (3, 3).

(C) For the points $(k, 6 - k)$, the other two main constraints require:

$$5k - 18 \le 6 \text{ and } 6 - 2k \le 3$$

$$\Rightarrow 1.5 \le k \le 4.8$$

So (1, 5) is not feasible: (C) false.

(D) True: every point of this segment is optimal.

IAPT answer: (A), (B), (D) | **Zigyan answer:** (A), (B), (D)

57. There are two whales of exactly the same shape and size. One can just float in a sea somewhat below the arctic circle (say arctic whale) and the other in a tropical sea near the equator (say equatorial whale). Salinity of sea water first increases in going from the equator towards the poles and then decreases in going close to the poles. Which of the following statement(s) is/are true?

(A) The two whales are of the same mass
(B) Equatorial whale has smaller mass
(C) Equatorial whale has larger mass
(D) Arctic whale has more weight

Solution · Q57 **Answer: (B), (D)**

A whale that just floats displaces water equal to its own weight. Both displace the same volume:

$$m = \rho V$$

Cold water near the arctic circle is denser than warm tropical water.

$$\Rightarrow m_{arctic} > m_{equatorial}$$

So (B) is true, while (A) and (C) are false.

(D) True: the arctic whale has more mass, and g is greater at higher latitude.

IAPT answer: (B), (D) | **Zigyan answer:** (B), (D)

58. A point charge q = 1.00 μC and mass m = 1.00 μg moves in a potential $V(x) = -\frac{a}{x^2} + \frac{b}{x^3}\,(x > 0)$, where a = 1000 V × μm^2 and b = 100 V × μm^3. The correct statement(s) is/are

(A) There is an equilibrium at x = 0.15 μm
(B) Around x = 0.15 μm, charge can make small oscillations
(C) The period of small oscillations of charge around x = 0.15 is 0.10 ms
(D) A negative charge will not experience zero force at x = 0.15 μm

Solution · Q58 **Answer: (A), (B)**

Force on the charge:

$$F = -q\left(\frac{2a}{x^3} - \frac{3b}{x^4}\right)$$

At equilibrium,

$$x_0 = \frac{3b}{2a}$$

$$\Rightarrow x_0 = 0.15\ \mu m$$

$\therefore$ (A) true.

$$V''(x_0) = \frac{12b - 6ax_0}{x_0^5}$$

$$\Rightarrow V''(x_0) \approx 3.95 \times 10^{18}\ V\ m^{-2}$$

V″ and q are positive: the equilibrium is stable, so (B) is true.

$$k = qV''(x_0) \approx 3.95 \times 10^{12}\ N\ m^{-1}$$

$$m = 1.00 \times 10^{-9}\ kg$$

$$T = 2\pi\sqrt{\frac{m}{k}}$$

$$\Rightarrow T \approx 1.0 \times 10^{-10}\ \text{s}$$

This is 0.10 ns, not 0.10 ms: (C) false.

(D) False: the force on a negative charge also vanishes there.

IAPT answer: (A), (B) | **Zigyan answer:** (A), (B)

59. Two bodies are moving under their mutual gravitational force in circular orbits. Their mass ratio is 2:5. The ratio of their

(A) Speeds of the two masses will be in ratio of 5 : 2

(B) Angular speeds around CoM will be in ration of 4 : 25

(C) Angular momenta about the CoM will be 1 : 1

(D) Kinetic energies will be 5 : 2

Solution · Q59 **Answer: (A), (D)**

Both bodies have the same angular speed about the CoM; orbit radii vary inversely as the masses.

$$r_1 : r_2 = 5 : 2$$

(A) Speed is proportional to radius:

$$v_1 : v_2 = 5 : 2$$

$\therefore$ true.

(B) Angular speeds are equal: false.

(C) Angular momentum is mvr:

$$L_1 : L_2 = (2 \times 5 \times 5) : (5 \times 2 \times 2)$$

$$\Rightarrow L_1 : L_2 = 5 : 2$$

$\therefore$ false.

(D) Kinetic energy:

$$K_1 : K_2 = (2 \times 5^2) : (5 \times 2^2)$$

$$\Rightarrow K_1 : K_2 = 5 : 2$$

$\therefore$ true.

IAPT answer: (A), (D) | **Zigyan answer:** (A), (D)

60. Assume that the Moon's orbit around the Earth is an almost circular ellipse and that neither its orbit nor its rotation axis precesses. From the Earth we can see more than 50 % of the surface of the Moon because

(A) rotation period and revolution period of the Moon are not equal

(B) the Moon's speed of revolution increases and decreases along the elliptical orbit

(C) inclination of the Moon's orbit with the ecliptic plane makes the Moon alternately show more northern or more southern part

(D) other side of the Moon is also visible sometimes

Solution · Q60 **Answer: (B), (C)**

(A) False: the Moon is tidally locked, so the two periods are equal.

(B) True: rotation is uniform but orbital angular speed varies, showing extra surface at the east and west edges.

(C) True: the rotation axis is nearly normal to the ecliptic while the orbit is inclined about 5° to it, so each polar region is seen better alternately.

(D) False: it gives no cause, and the far side as a whole never comes into view.

IAPT answer: (B), (C) | **Zigyan answer:** (B), (C)

ANSWER KEY

NSEA 2024 · PAPER CODE 41

60
QUESTIONS · 216 MARKS

IAPT final answer key for paper code 41. ★ marks an answer given as per Zigyan.

1	(B)	2	(C)	3	(A)	4	(B)	5	(D)
6	(D)	7	(B)	8	(C)	9	(B)★	10	(C)
11	—★	12	(A)★	13	(C)	14	(C)	15	(A)
16	(B)	17	(A)	18	(D)	19	(B)	20	(A)★
21	(A)	22	(C)	23	(B)	24	(D)	25	(C)
26	(C)	27	(D)	28	(B)	29	(B)	30	(D)
31	(B)	32	(A)	33	(D)	34	(B)★	35	(A)
36	(D)	37	(D)★	38	(C)	39	(A)	40	(C)★
41	(D)	42	(B)	43	(D)	44	(B)	45	(C)
46	(C)	47	(C)	48	(B)	49	(A), (B), (C), (D)	50	(A), (C), (D)
51	(A), (B), (C), (D)★	52	(A), (C)	53	(A), (B), (C), (D)★	54	(B), (C)	55	(A), (C), (D)
56	(A), (B), (D)	57	(B), (D)	58	(A), (B)	59	(A), (D)	60	(B), (C)

★ Answers as per Zigyan

- **Q9** — As per Zigyan: (B); IAPT key (D).
- **Q11** — As per Zigyan: no option is correct; IAPT key (A).
- **Q12** — As per Zigyan: (A); IAPT key (A).
- **Q20** — As per Zigyan: (A); IAPT key (A) or (C).
- **Q34** — As per Zigyan: (B); IAPT key (B).
- **Q37** — As per Zigyan: (D); IAPT key (D).
- **Q40** — As per Zigyan: (C); IAPT key (D).
- **Q51** — As per Zigyan: (A), (B), (C), (D); IAPT key (D).
- **Q53** — As per Zigyan: (A), (B), (C), (D); IAPT key (A), (B), (C), (D).

zigyan

OLYMPIADS · 2026

Olympiad results



TOP ACHIEVEMENT · CHEMISTRY

Qualified the Chemistry Olympiad twice, and selected for the HBCSE camp.

Saksham Bishnoi reached the national stage of the Chemistry Olympiad in two consecutive years and was selected for the Orientation-cum-Selection Camp at HBCSE, Mumbai. 4 Years Classroom - the same student who took AIR 168 in JEE Advanced 2026.

Qualified twice | HBCSE selection camp | Only student from Faridabad

Above MAS means above the **Minimum Admissible Score**: clearing it puts a student in the national band for their subject. It is a real threshold, not a participation marker.

CHEMISTRY · ABOVE MAS



Sulokya Bibhuty
Class XII
3 Years Classroom
Above MAS



Anay Gupta
Class XI
3 Years Classroom
Above MAS



Akshat Khator
Class XI
3 Years Classroom
Above MAS



Harshit Goyal
Class XII
4 Years Classroom
Above MAS



Hardik Sharma
Class XI
3 Years Classroom
Above MAS



Aarush Kumar
Class XII
1 Year Classroom
Above MAS

PHYSICS · ASTRONOMY · MATHEMATICS

PHYSICS



Sulokya Bibhuty
Class XII
3 Years Classroom
Above MAS

PHYSICS



Saksham Bishnoi
Class XII
4 Years Classroom
Above MAS

ASTRONOMY



Sulokya Bibhuty
Class XI
3 Years Classroom
Above MAS

MATHEMATICS · IOQM



Priyanshi
Class XI
4 Years Classroom
IOQM Qualifier

OLYMPIADS WE PREPARE STUDENTS FOR

NSEP	NSEC	NSEB	NSEA	IOQM	NSEJS
Physics	Chemistry	Biology	Astronomy	Mathematics	Class X and below

The olympiad pathway starts in Class 8.

NSEJS is open to Class 10 and below - the habit of staying with one hard problem is the one JEE Advanced rewards.

Zigyan Eduvision Pvt. Ltd. · SCO No. 107, Sector 16, Faridabad 121002
0129-4048800 · +91 92115 38800 · info@zigyan.com

zigyan

RESULTS · 2021 – 2026

Our toppers, year by year

40
JEE Advanced selections in 6 years

AIR 168
best rank — Saksham Bishnoi, 2026

16 of 35
students selected, JEE Advanced 2026

14 of 35
above 98 percentile, JEE Main 2026

JEE ADVANCED SELECTIONS PER YEAR

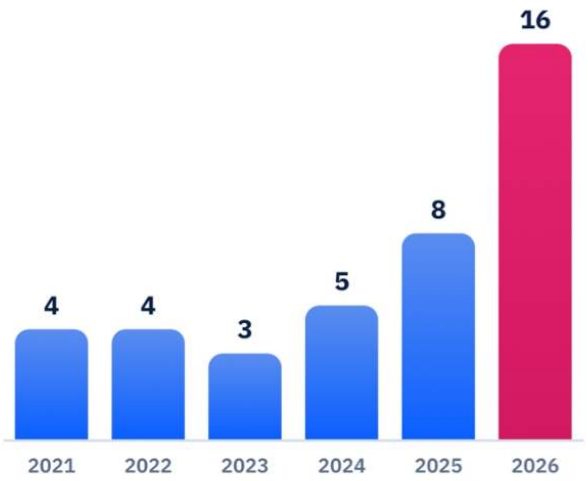

BEST RANK EACH YEAR

YEAR	JEE ADVANCED	JEE MAIN
2026	**Saksham Bishnoi** AIR 168 · 4 Years Classroom	**Saksham Bishnoi** AIR 811 · 99.95 %ile
2025	**Chakshu** AIR 4,233 · 2 Years Classroom	**Chakshu** AIR 8,538 · 99.44 %ile
2024	**Harshit** AIR 777 · 2 Years Classroom	**Harshit** AIR 1,473 · 99.91 %ile
2023	**Aditya Jain** AIR 2,373 · 2 Years Classroom	**Aditya Jain** AIR 2,503 · 99.79 %ile
2022	**Rachit Sharma** AIR 698 · 1 Year Classroom	**Rachit Sharma** AIR 1,016 · 99.90 %ile
2021	**Sparsh Mittal** AIR 2,237 · 1 Year Classroom	**Sparsh Mittal** AIR 1,562

JEE ADVANCED 2026 — THIRTEEN NAMED SELECTIONS



Saksham Bishnoi
AIR 168
4 Years Classroom



Sulokya Bibhuty
AIR 1,315
3 Years Classroom



Aarush
AIR 2,699
1 Year Classroom



Manishka
AIR 2,869
4 Years Classroom



Oojit Kumar
AIR 5,765
4 Years Classroom



Harshit Goyal
AIR 6,407
4 Years Classroom



Pranab Sharma
AIR 6,750
3 Years Classroom



Aditya Dhar
AIR 15,183
3 Years Classroom



Arpit Anshuman
AIR 19,308
4 Years Classroom



Lokesh
AIR 22,857
3 Years Classroom



Arjun
AIR 24,674
3 Years Classroom



Sanyam Gulyani
AIR 25,123
1 Year Classroom



Saket
AIR 27,628
3 Years Classroom

Sixteen students of the 2026 batch were selected in JEE Advanced; the thirteen above are named with their All India Rank.

JEE MAIN 2026 — TOP SIX, WITH PERCENTILE



Saksham Bishnoi
AIR 811
99.95 %ile
4 Years Classroom



Sulokya Bibhuty
AIR 1,095
99.94 %ile
3 Years Classroom



Harshit Goyal
AIR 2,662
99.83 %ile
4 Years Classroom



Manishka
AIR 4,817
99.70 %ile
4 Years Classroom



Oojit Kumar
AIR 5,040
99.69 %ile
4 Years Classroom



Aarush
AIR 5,276
99.67 %ile
1 Year Classroom

14 of the 35 students in the 2026 batch scored above the 98th percentile in JEE Main.

Zigyan Eduvision Pvt. Ltd. · SCO No. 107, Sector 16, Faridabad 121002
0129-4048800 · +91 92115 38800 · info@zigyan.com