zigyan

PREVIOUS YEAR PAPER · 2025

OLYMPIAD · STAGE I

NSEA

National Standard Examination in Astronomy

2025

Question paper, answer key and Zigyan solutions

60	216	120 min	41
Questions	Maximum marks	Time	Paper code

Question paper and official answer key: Indian Association of Physics Teachers (IAPT), NSEA 2025, paper code 41.
Solutions and notes: Zigyan. This booklet is not an IAPT publication.

Prepare for the Olympiads with Zigyan

www.zigyan.com

zigyan

SCO No. 107, Sector 16, Faridabad, Haryana 121002
0129-4048800 · +91 92115 38800 · info@zigyan.com

zigyan

JEE 2026 RESULTS

OUR TOPPERS

When talent meets the right guidance.

Saksham Bishnoi and Sulokya Bibhuty - our JEE 2026 toppers from Zigyan, Sector 16 - with the programme they took and the rank they earned.



Rahul Kaushik Sir
Founder & Director, Zigyan Eduvision
23 years of teaching



Saksham Bishnoi

4 YEARS CLASSROOM

JEE ADVANCED 2026	JEE MAIN 2026
AIR 168	AIR 811
	99.95 percentile



Sulokya Bibhuty

3 YEARS CLASSROOM

JEE ADVANCED 2026	JEE MAIN 2026
AIR 1,315	AIR 1,095
	99.94 percentile

OLYMPIAD RESULTS

Above the Minimum Admissible Score - the national band for the subject

CHEMISTRY

- Sulokya Bibhuty — 3 Years Classroom
- Anay Gupta — 3 Years Classroom
- Akshat Khator — 3 Years Classroom
- Harshit Goyal — 4 Years Classroom
- Hardik Sharma — 3 Years Classroom
- Aarush Kumar — 1 Year Classroom

PHYSICS

- Sulokya Bibhuty — 3 Years Classroom
- Saksham Bishnoi — 4 Years Classroom

ASTRONOMY

- Sulokya Bibhuty — 3 Years Classroom

MATHEMATICS (IOQM)

- Priyanshi — 4 Years Classroom

Saksham Bishnoi qualified the Chemistry Olympiad twice and was selected for the Orientation-cum-Selection Camp at HBCSE, Mumbai.

16 selections	16 of 35	AIR 168
in JEE Advanced 2026	students of the batch selected	best JEE Advanced rank

Start where they started.

Register for ZEST - ₹200 · www.zigyan.com/scholarship/zest

+91 92115 38800
info@zigyan.com

Given in the question paper

Physical constants you may need….

Magnitude of charge on electron $e = 1.60 \times 10^{-19}\,C$	Speed of light in free space $c = 3 \times 10^{8}\,ms^{-1}$
Mass of electron $m_e = 9.11 \times 10^{-31}\,kg$	Speed of sound in dry air at 0°C $v = 332\,ms^{-1}$
Mass of proton $m_p = 1.67 \times 10^{-27}\,kg$	Permittivity of free space $\varepsilon_0 = 8.85 \times 10^{-12}\,C^2/Nm^2$
Mass of neutron $m_n = 1.67 \times 10^{-27}\,kg$	Permeability of free space $\mu_0 = 4\pi \times 10^{-7}\,H/m$
Acceleration due to gravity $g = 9.80\,ms^{-2}$	Planck's constant $h = 6.626 \times 10^{-34}\,Js$
Universal gravitational constant $G = 6.67 \times 10^{-11}\,Nm^2/kg^2$	Rydberg constant $R = 1.097 \times 10^{7}\,m^{-1}$
Universal gas constant $R = 8.31\,J/molK$	Astronomical unit $= 1.50 \times 10^{11}\,m$
Boltzmann constant $k = 1.38 \times 10^{-23}\,J/K$	Radius of Sun $R = 6.96 \times 10^{8}\,m$
Stefan's constant $\sigma = 5.67 \times 10^{-8}\,W/m^2K^4$	Mass of Sun $M = 2.0 \times 10^{30}\,kg$
Avogadro's constant $A = 6.022 \times 10^{23}\,mol^{-1}$	Radius of the Earth = 6371 km
Faraday constant $= 96{,}500\ C/mol$	Mass of the Earth = $5.97 \times 10^{24}\,kg$

PART A-1 · ONE CORRECT OPTION

Q. 1 – 48 · +3 for a correct answer, –1 for a wrong one

1. In a hypothetical scenario the force experienced by a particle is given by $F = Ae^{px/t^2} + BV_t^2$, where $V_t = \sqrt{\frac{2mg}{\rho\eta S}}$ is the expression for terminal velocity. Where m is the mass, g is the acceleration due to gravity, ρ is the density of the medium, S is the surface area of the particle, and η is the coefficient of viscosity of the medium. The possible units of A, B and p are

(A) A: newton, B: newton kg m^{-1}, p: m s^2

(B) A: no units, B: newton kg m^{-1}, p: m^{-1} s^2

(C) A: newton, B: kg m^{-1}, p: no units

(D) A: newton, B: newton s^2 m^{-2}, p: m^{-1} s^2

Solution · Q1 — **As per Zigyan: (D)**

The exponent has no unit, and both added terms are forces. So A is in newton.

For the exponent:

$$[p] = [t^2/x] = m^{-1}\,s^2$$

V_t is a terminal velocity, so its unit is m s^{-1}. The printed root, which contains η, does not give the unit of a speed and is not used.

$$[B] = N/(m\ s^{-1})^2$$

$$\Rightarrow [B] = N\ s^2\ m^{-2}$$

Reference: NCERT Physics Class XI (Part I), Chapter 1 'Units and Measurement', section 1.6.1: only quantities of the same dimensions can be added, and the argument of an exponential function must be dimensionless.

IAPT answer: (D) | **Zigyan answer:** (D)

2. Gravity on the surface of Ganymede, a satellite of Jupiter, is $\left(\frac{1}{7^{\text{th}}}\right)$ of that on the Earth, while the gravity on the surface of the Moon is $\left(\frac{1}{6^{\text{th}}}\right)$ of that on the Earth. Two identical pendulums are taken one on Ganymede and the other on the Moon. The two pendulums start oscillating together, after how many oscillations on Moon will they come again in the same phase with approximately 1% uncertainty?

(A) 24 (B) 25 (C) 26 (D) 27

Solution · Q2 **Answer: (D)**

For a simple pendulum, the period varies inversely as the square root of g.

$$\frac{T_G}{T_M} = \sqrt{\frac{7}{6}} \approx 1.0801$$

$$\Rightarrow T_G \approx \frac{27}{25} T_M$$

After 27 oscillations on the Moon:

$$27T_M \approx 24.997T_G$$

The mismatch is within 1% of a period. For 24, 25 and 26 oscillations it is 7% or more.

IAPT answer: (D) | **Zigyan answer:** (D)

3. Consider two telescopes having equal apertures of 400 mm. One has a focal ratio of $\frac{f}{5}$, the other has the focal ratio of $\frac{f}{10}$. What is the relation between their focal lengths?

(A) Focal length of the telescope with $\frac{f}{5}$ ratio is twice as compared to the focal length of telescope with $\frac{f}{10}$ ratio.

(B) Focal length of the telescope with $\frac{f}{10}$ ratio is twice as compared to the focal length of telescope with $\frac{f}{5}$ ratio.

(C) Focal length of the telescope with $\frac{f}{10}$ ratio is four times smaller as compared to the focal length of telescope with $\frac{f}{5}$ ratio.

(D) Focal lengths of both telescopes are the same

Solution · Q3 **Answer: (B)**

For focal ratio f/N, the focal length F is N times the aperture D.

$$F = ND$$

$$F_5 = 5 \times 400 = 2000 \text{ mm}$$

$$F_{10} = 10 \times 400 = 4000 \text{ mm}$$

$$\Rightarrow F_{10} = 2F_5$$

So the f/10 telescope has twice the focal length.

IAPT answer: (B) | **Zigyan answer:** (B)

4. Statement I:The radius vector of a planet sweeps equal area in equal time while revolving around the Sun.

Statement II: Gravitational force between the Sun and the planet is along the line joining the two.

(A) Both the Statements are true, and Statement II is correct reason of Statement I.

(B) Both the Statements are true, but Statement II is not the correct reason of Statement I.

(C) The Statement I is true and the Statement II is false.

(D) The Statement I is false and the Statement II is true.

Solution · Q4 **Answer: (A)**

Gravity acts along the line joining the Sun and the planet, so its torque about the Sun is zero. Hence the angular momentum L is constant.

$$\frac{dA}{dt} = \frac{L}{2m}$$

So the areal velocity is constant. Both statements are true, and II explains I.

IAPT answer: (A) | **Zigyan answer:** (A)

5. Which of the following graphs qualitatively depicts the variation in resistivity of a semiconductor with respect to temperature correctly?

(A)

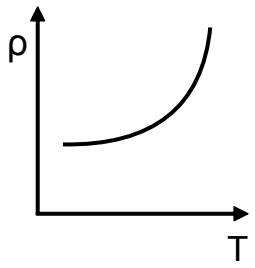

(B)

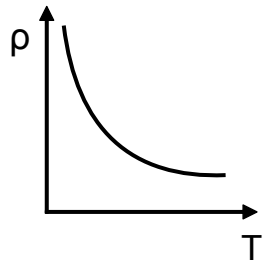

(C)

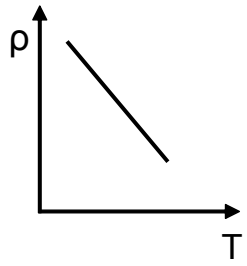

(D)

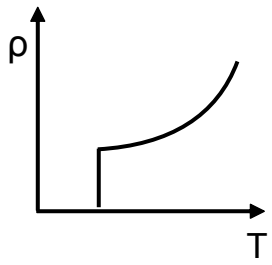

Solution · Q5 **Answer: (B)**

In a semiconductor, the number density of charge carriers rises steeply with temperature.

So the resistivity falls rapidly, along a curve, as T increases.

IAPT answer: (B) | **Zigyan answer:** (B)

6. Three identical bulbs, B, C and D are connected in a circuit as shown below. By connecting one more identical bulb

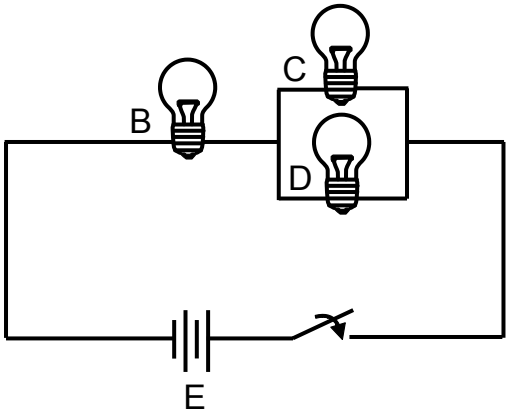

(A) in series with bulb B, the intensity of bulb B will decrease but that of bulb C and D will increase.

(B) in parallel with bulb B, the intensities of all the three bulbs B, C and D will decrease.

(C) in parallel with bulbs C and D, the intensities of all the three bulbs B, C and D will increase.

(D) in series with bulb C, the intensity of bulb B will decrease and that of bulb D will increase.

Solution · Q6 **Answer: (D)**

Let each bulb have resistance R. A larger current means a brighter bulb.

Initially:

$$I_B = \frac{2E}{3R}$$

$$I_C = I_D = \frac{E}{3R}$$

With the new bulb in series with C:

$$R_{eq} = R + \frac{2R \times R}{2R + R} = \frac{5R}{3}$$

$$\Rightarrow I_B = \frac{3E}{5R}$$

$$\Rightarrow I_D = \frac{2}{3} I_B = \frac{2E}{5R}$$

So B becomes dimmer and D becomes brighter.

IAPT answer: (D) | **Zigyan answer:** (D)

7. Two cannons are placed on 1000 m high towers at a horizontal distance of 400 m between them along x-axis. Ball A is fired at an angle of 45° to the +ve x-axis whereas Ball B is fired at an angle of 45^0 to the −ve x-axis. Initial velocity of projection given to each ball is u = 40 m/s in magnitude. The point P (x, y) at which the two balls collide is

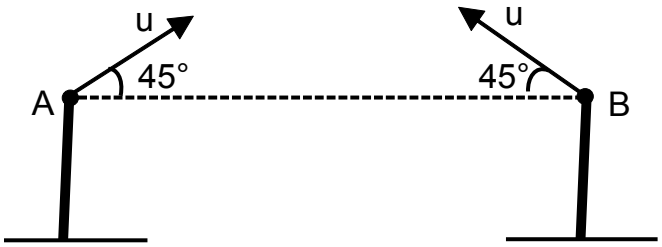

(A) x = 200 m, y = − 45 m

(B) x = 200 m, y = 0

(C) x = 100 m, y = − 200 m

(D) the two balls will not collide

Solution · Q7 **Answer: (A)**

Take A as the origin. By symmetry, the balls meet midway.

$$x = 200 \text{ m}$$

$$t = \frac{200}{40\cos 45^\circ} = 5\sqrt{2} \text{ s}$$

$$y = (40\sin 45^\circ)t - \frac{1}{2}gt^2$$

$$\Rightarrow y = 200 - 4.9 \times 50$$

$$\Rightarrow y = -45 \text{ m}$$

The towers are 1000 m high, so the balls are still in the air.

IAPT answer: (A) | **Zigyan answer:** (A)

8. Sixty moles of Helium gas are initially at 28°C (at A). It undergoes an isothermal process from A to B and then an isobaric process from B to C. Total change in the internal energy of the gas in the complete process from A to C would be approximately,

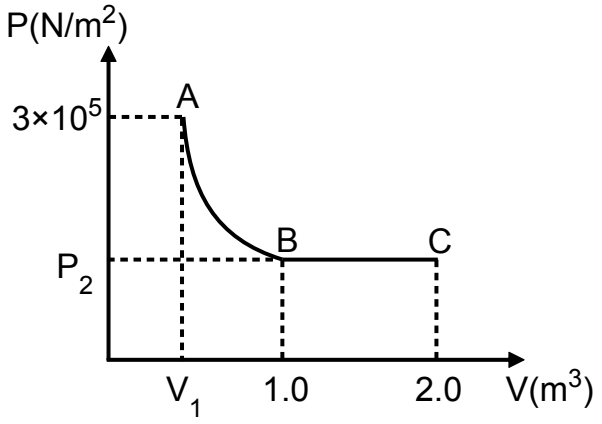

Physical constants you may need....

Universal gas constant R = 8.31 J/mol K

(A) 206 kJ (B) 450 kJ (C) 431 kJ (D) 225 kJ

Solution · Q8 **Answer: (D)**

A to B is isothermal:

$$T_B = T_A = 301\ K$$

B to C is isobaric and the volume doubles:

$$T_C = 2 \times 301 = 602\ K$$

Helium is monatomic.

$$\Delta U = n \times \frac{3R}{2}(T_C - T_A)$$

$$\Rightarrow \Delta U = 60 \times \frac{3}{2} \times 8.31 \times 301$$

$$\Rightarrow \Delta U \approx 225\ kJ$$

IAPT answer: (D) | **Zigyan answer:** (D)

9. In an atom, the nucleus consists of 2 protons and 2 neutrons and one electron is revolving around the nucleus. According to Bohr's atomic model, the only visible wavelength corresponds to the transition

Physical constants you may need....

Rydberg constant R = $1.097 \times 10^7\ m^{-1}$

(A) 2nd to 1st orbit (B) 4th to 2nd orbit

(C) 4th to 3rd orbit (D) 5th to 3rd orbit

Solution · Q9 **Answer: (C)**

The atom is the He^+ ion.

$$Z = 2$$

For the transition from the 4th to the 3rd orbit:

$$\frac{1}{\lambda} = RZ^2\left(\frac{1}{3^2} - \frac{1}{4^2}\right) = \frac{7R}{36}$$

$$\Rightarrow \lambda = \frac{36}{7 \times 1.097 \times 10^7}\ \text{m}$$

$$\Rightarrow \lambda \approx 469\ \text{nm}$$

This is visible light. The other listed transitions give about 30 nm, 122 nm and 321 nm, all ultraviolet.

IAPT answer: (C) | **Zigyan answer:** (C)

10. Select the statement describing correctly the functioning of the circuit, shown below.

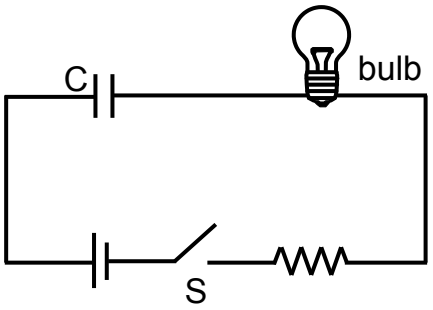

(A) From the time the switch S is closed, the bulb will start glowing with intensity increasing uniformly to a maximum value and will turn off after some time.

(B) As soon as the switch S is closed, the bulb will glow with maximum intensity which will then slowly decrease to zero.

(C) From the time the switch S is closed, the bulb will start glowing with intensity increasing uniformly to a maximum value and will continue glowing thereafter.

(D) If distance between the parallel plates of the capacitor is increased, bulb intensity will attain maximum value in shorter time after the switch is closed.

Solution · Q10 **Answer: (B)**

Take the capacitor as uncharged at first. Just after S is closed, there is no voltage across it, so the current is maximum.

As it charges:

$$i = i_0 e^{-t/RC}$$

So the bulb is brightest at the start, then slowly dims to zero.

IAPT answer: (B) | **Zigyan answer:** (B)

11. A mechanical spring deviates from Hooke's law as $F \propto -k(e^x - 1)$, where x is the strain. At what value of the strain x, the force deviates from the one obeying Hooke's law with same k and unit length, just by 1% ?

(A) x = 1% (B) x = 2% (C) x = 5% (D) x = 20%

Solution · Q11 **Answer: (B)**

Actual force and Hooke's law force:

$$F = -k(e^x - 1)$$

$$F_H = -kx$$

For a 1% deviation:

$$\frac{e^x - 1 - x}{x} = 0.01$$

For small x:

$$e^x \approx 1 + x + \frac{x^2}{2}$$
$$\Rightarrow \frac{x}{2} \approx 0.01$$
$$\Rightarrow x \approx 0.02$$

So the strain is about 2%.

IAPT answer: (B) | **Zigyan answer:** (B)

12. Three lenses with focal lengths f, f′ and f respectively are kept with common principal axis in that order with successive separation of $\frac{f}{2}$ between each pair. If the point object is placed on the common principal axis to the left of 1st lens at 2f distance from it. What should be the value of focal length f′ so as to form the final image at distance of 2f from 3rd lens on the right of it?

(A) $-\frac{4f}{3}$ (B) $+\frac{4f}{3}$

(C) $-\frac{3f}{4}$ (D) $-\frac{3f}{5}$

Solution · Q12 **Answer: (C)**

First lens:

$$u_1 = -2f, v_1 = 2f$$

This image is a virtual object for the second lens.

$$u_2 = 2f - \frac{f}{2} = +\frac{3f}{2}$$

For the final image at 2f, the object of the third lens must be 2f to its left. So for the second lens:

$$v_2 = -\left(2f - \frac{f}{2}\right) = -\frac{3f}{2}$$
$$\frac{1}{f'} = \frac{1}{v_2} - \frac{1}{u_2} = -\frac{4}{3f}$$
$$\Rightarrow f' = -\frac{3f}{4}$$

IAPT answer: (C) | **Zigyan answer:** (C)

13. A negatively charged small ball with charge – 20 pC and mass 1.00 mg is placed at the centre of a uniformly charged ring of radius 5.00 cm. The negatively charged ball is allowed to move only along the axis of the ring. The ball executes SHM with frequency of 1.00 kHz. The charge on the ring is

(A) 27.4 mC (B) 0.55 mC (C) 13.9 μC (D) 0.69 μC

Solution · Q13 **Answer: (A)**

The ring is positively charged. For a small displacement x along the axis, the force on the ball is:

$$F = -\frac{kQ|q|x}{R^3}$$

So the motion is SHM with:

$$\omega^2 = \frac{kQ|q|}{mR^3}$$

$$\omega = 2\pi \times 10^3 \text{ rad s}^{-1}$$

$$Q = \frac{m\omega^2 R^3}{k|q|}$$

$$\Rightarrow Q = \frac{10^{-6} \times \left(2\pi \times 10^3\right)^2 \times (0.05)^3}{9 \times 10^9 \times 20 \times 10^{-12}}$$

$$\Rightarrow Q \approx 2.74 \times 10^{-2} \text{ C}$$

$$\therefore Q = 27.4 \text{ mC}$$

IAPT answer: (A) | **Zigyan answer:** (A)

14. Two hunters approach a prey from opposite directions. One hunter has a probability of $\frac{1}{3}$ for hitting the prey, the other has a probability of $\frac{2}{3}$ for hitting the prey. Both fires a burst of 3 shots each simultaneously. Assume that both the hunters fire one shot each at the same time simultaneously, followed by another shot each at the same time, followed by the third shot each at the same time, each round of shots have negligible time gap between them. The probability that the prey, in question, is hit

(A) after the three rounds is 1

(B) in the first round of shots is 1

(C) after the three rounds is $\frac{7}{9}$

(D) after the three rounds is $\frac{721}{729}$

Solution · Q14 **Answer: (D)**

The shots are independent. In one round, both hunters miss with probability:

$$\left(1 - \frac{1}{3}\right)\left(1 - \frac{2}{3}\right) = \frac{2}{9}$$

The prey escapes all three rounds with probability:

$$\left(\frac{2}{9}\right)^3 = \frac{8}{729}$$

So the probability that the prey is hit is:

$$1 - \frac{8}{729} = \frac{721}{729}$$

IAPT answer: (D) | **Zigyan answer:** (D)

15. A particle moving with constant velocity along X-axis has angular momentum p = 120 units about a reference point in XY plane. Which of the following statements is correct?

(A) If the reference point is shifted parallel to Y axis, angular momentum need not change necessarily.

(B) If the reference point is taken to double the present distance from origin, instantaneous angular velocity become half the present value.

(C) It is always possible to increase instantaneous angular velocity to double the present value by shifting reference point parallel to X axis.

(D) If the reference point is shifted parallel to X axis, angular momentum will surely not change about it.

Solution · Q15 **Answer: (D)**

Line of motion and reference point:

$$y = y_0 \text{ and } (a, b)$$

Angular momentum about this point:

$$L = mv(b - y_0)$$

(A) A shift parallel to the Y axis changes b, so L changes. ∴ false.

(B), (C) With d the distance of the point from the line, and s the separation along X between the point and the particle:

$$\omega = \frac{vd}{d^2 + s^2}$$

(B) The distance from the origin alone does not fix ω. ∴ false.

(C) A shift parallel to X changes only s. The largest possible value is:

$$\omega_{max} = v/d$$

So ω cannot be doubled once it exceeds half of this value. ∴ false.

(D) A shift parallel to X changes only a, so L stays the same. ∴ true.

IAPT answer: (D) | **Zigyan answer:** (D)

16. An electron moving with speed of 0.1% speed of light, enters a uniform magnetic field of strength 2.5 gauss at 60° angle. Calculate the number of helical turns it takes in moving 1 km distance.

(A) 20000 to 22000 (B) 22000 to 25000 (C) 30000 to 32000 (D) 45000 to 47000

Solution · Q16 **As per Zigyan: (D)**

The 1 km is the distance advanced along the magnetic field, that is, along the axis of the helix.

$$v = 0.001c = 3 \times 10^5 \text{ m s}^{-1}$$

$$v_{\parallel} = v \cos 60° = 1.5 \times 10^5 \text{ m s}^{-1}$$

Time period:

$$T = \frac{2\pi m}{eB}$$

$$\Rightarrow T = \frac{2\pi \times 9.1 \times 10^{-31}}{1.6 \times 10^{-19} \times 2.5 \times 10^{-4}}$$

$$\Rightarrow T \approx 1.43 \times 10^{-7} \text{ s}$$

Pitch of the helix:

$$p = v_{\parallel} T \approx 2.144 \times 10^{-2}\ \text{m}$$

Number of turns:

$$N = \frac{1000}{p} \approx 4.66 \times 10^{4}$$

This lies from 45000 to 47000.

Reference: NCERT Physics Class XII (Part I), Chapter 4 'Moving Charges and Magnetism', section 4.3: the pitch of a helix is the distance moved along the magnetic field in one rotation; it is the parallel velocity multiplied by the time period.

IAPT answer: (D) | **Zigyan answer:** (D)

17. If $a + \frac{1}{a} = \sqrt{3}$ then $a^6 + \frac{1}{a^6}$ is

(A) 27 (B) 0 (C) -2 (D) 81

Solution · Q17 **Answer: (C)**

Cubing the given relation:

$$a^3 + \frac{1}{a^3} = \left(\sqrt{3}\right)^3 - 3\sqrt{3} = 0$$

Squaring this result:

$$a^6 + \frac{1}{a^6} + 2 = 0$$

$$\Rightarrow a^6 + \frac{1}{a^6} = -2$$

IAPT answer: (C) | **Zigyan answer:** (C)

18. If $\sin x + \cos x = \sqrt{2}$ then $\sin^4 x + \cos^4 x$ is

(A) 4 (B) -1

(C) 1 (D) $\frac{1}{2}$

Solution · Q18 **Answer: (D)**

Squaring the given relation:

$$1 + 2 \sin x \cos x = 2$$

$$\Rightarrow \sin x \cos x = \frac{1}{2}$$

$$\sin^4 x + \cos^4 x = (\sin^2 x + \cos^2 x)^2 - 2 \sin^2 x \cos^2 x$$

$$= 1 - 2 \times \frac{1}{4} = \frac{1}{2}$$

IAPT answer: (D) | **Zigyan answer:** (D)

19. If a, b, c are in arithmetic progression and a^2, b^2, c^2 are in geometric progression, then the common ratio is

(A) 0 (B) 1 (C) 2 (D) 3

Solution · Q19 **Answer: (B)**

From the two progressions:

$$2b = a + c \text{ and } b^4 = a^2c^2$$

$$\Rightarrow b^2 = \pm ac$$

Taking the positive sign:

$$(a + c)^2 = 4ac$$

$$\Rightarrow (a - c)^2 = 0$$

$$\therefore a = b = c$$

So the common ratio is 1.

The negative sign gives the ratios below, which are not among the options.

$$3 \pm 2\sqrt{2}$$

IAPT answer: (B) | **Zigyan answer:** (B)

20. $\sum_{n=1}^{\infty} \frac{1}{n(n+3)} =$

(A) $\frac{1}{3}$ (B) $\frac{11}{18}$

(C) $\frac{1}{2}$ (D) $\frac{4}{17}$

Solution · Q20 **Answer: (B)**

By partial fractions:

$$\frac{1}{n(n+3)} = \frac{1}{3}\left(\frac{1}{n} - \frac{1}{n+3}\right)$$

In the sum, the terms cancel in pairs and three positive terms remain.

$$S = \frac{1}{3}\left(1 + \frac{1}{2} + \frac{1}{3}\right)$$

$$\Rightarrow S = \frac{11}{18}$$

IAPT answer: (B) | **Zigyan answer:** (B)

21. Let f: $\mathbb{R} \to \mathbb{R}$ be defined as f(x) = max{x^2, 1}. Then

(A) f is differentiable everywhere

(B) f is continuous everywhere but not differentiable at x = ±1

(C) f is not continuous at x = ±1

(D) f is neither continuous nor differentiable.

Solution · Q21 **Answer: (B)**

$$f(x) = 1, |x| \le 1$$

$$f(x) = x^2, |x| > 1$$

Both parts have the same value at the joining points, so f is continuous everywhere.

Left and right derivatives at the point 1:

0 and 2

At the point −1:

−2 and 0

They are unequal, so f is not differentiable at these two points.

IAPT answer: (B) | **Zigyan answer:** (B)

22. Let T_1 denote an equilateral triangle of side length a, T_2 be the triangle whose vertices are midpoints of sides of T_1, T_3 be the triangle whose vertices are midpoints of sides of T_2. We continue in similar manner to obtain the triangles T_4, T_5, ... For each natural number n, let P_n denote the perimeter of the triangle T_n. Then $\sum_{n=1}^{\infty} P_n =$

(A) 12a (B) 8a (C) 6a (D) 3a

Solution · Q22 **Answer: (C)**

By the midpoint theorem, each new side is half of the previous side. So the perimeters form a G.P.

$$P_1 = 3a,\ r = 1/2$$

$$\sum_{n=1}^{\infty} P_n = \frac{3a}{1-\frac{1}{2}}$$

$$\Rightarrow \sum_{n=1}^{\infty} P_n = 6a$$

IAPT answer: (C) | **Zigyan answer:** (C)

23. $\sqrt{i} + \sqrt[3]{i^2} = x + iy$, where $i = \sqrt{-1}$. (x, y) = ?

(A) (− 0.293, 1.573) (B) (− 0.293, 0.707) (C) (− 0.207, 1.573) (D) (1.207, 1.573)

Solution · Q23 **As per Zigyan: (D)**

Both roots are taken as principal values, with each argument greater than −π and at most π.

$$\sqrt{i} = e^{i\pi/4}$$

$$\sqrt[3]{i^2} = \sqrt[3]{-1} = e^{i\pi/3}$$

Comparing real parts:

$$x = \cos 45° + \cos 60° \approx 1.207$$

Comparing imaginary parts:

$$y = \sin 45° + \sin 60° \approx 1.573$$

$$\therefore (x, y) = (1.207, 1.573)$$

Reference: NIST Digital Library of Mathematical Functions, section 4.2: the principal value of a power is found from the principal logarithm, whose argument is greater than −π and at most π; the library uses this value unless it states otherwise.

IAPT answer: (B) or (D) | **Zigyan answer:** (D)

24. A standard parabola $x^2 = 36y$ is approximated as an arc of a circle for small values of x. What will be the radius of that circle?

(A) 72 (B) 36 (C) 18 (D) 9

Solution · Q24 **Answer: (C)**

Near the vertex, take a circle of radius R touching the X axis at the origin.

$$x^2 + (y - R)^2 = R^2$$

$$\Rightarrow x^2 = 2Ry - y^2$$

For small x, the square of y is negligible.

$$x^2 \approx 2Ry$$

Comparing with the parabola:

$$2R = 36$$

$$\Rightarrow R = 18$$

IAPT answer: (C) | **Zigyan answer:** (C)

25. $\int_0^{\pi/2} \frac{\sin x}{\sin x + \cos x} dx =$

(A) $\frac{\pi}{2}$ (B) $\frac{\pi}{4}$

(C) 0 (D) π

Solution · Q25 **Answer: (B)**

$$I = \int_0^{\pi/2} \frac{\sin x}{\sin x + \cos x} dx$$

Replacing x by $\pi/2 - x$,

$$I = \int_0^{\pi/2} \frac{\cos x}{\sin x + \cos x} dx$$

Adding the two,

$$2I = \int_0^{\pi/2} dx$$

$$\Rightarrow I = \frac{\pi}{4}$$

IAPT answer: (B) | **Zigyan answer:** (B)

26. Let f(x) be continuous on $[0, \pi]$ and $f(x) + f(\pi - x) = \pi$. Then $\int_0^{\pi} f(x)\,dx =$

(A) π^2 (B) $\frac{\pi}{2}$

(C) $\frac{\pi^2}{2}$ (D) $\frac{\pi^2}{4}$

Solution · Q26 **Answer: (C)**

$$I = \int_0^{\pi} f(x)\,dx$$

Replacing x by π − x,

$$I = \int_0^{\pi} f(\pi - x)\,dx$$

Adding the two forms,

$$2I = \int_0^{\pi} [f(x) + f(\pi - x)]\,dx$$

$$\Rightarrow 2I = \pi^2$$

$$\Rightarrow I = \frac{\pi^2}{2}$$

IAPT answer: (C) | **Zigyan answer:** (C)

27. $\lim_{x \to 3} \frac{\sqrt{1 - \cos 2(x-3)}}{x-3}$

(A) Exists and it equals $\sqrt{2}$

(B) Exists and it equals $-\sqrt{2}$

(C) Does not exist because $(x - 1) \to 0$

(D) Does not exist because left hand limit is not equal to right hand limit.

Solution · Q27 **Answer: (D)**

$$t = x - 3,\ t \to 0$$

$$1 - \cos 2t = 2\sin^2 t$$

$$\lim_{t \to 0} \frac{\sqrt{2}\ |\sin t|}{t}$$

$$RHL = \sqrt{2}$$

$$LHL = -\sqrt{2}$$

The two limits are unequal, so the limit does not exist.

IAPT answer: (D) | **Zigyan answer:** (D)

28. A water tank has the shape of an inverted right circular cone, whose semi-vertical angle is $\tan^{-1}\left(\frac{3}{4}\right)$. Water is poured into it at a constant rate of 5 m^3/min. Then, the rate (in m/min) at which the water surface moves along the slant surface at the instant when the depth of water in the tank is 10 m is

(A) $\frac{1}{9\pi}$ (B) $\frac{9}{192\pi}$

(C) $\frac{1875}{4\pi}$ (D) $\frac{4}{27\pi}$

Solution · Q28 **Answer: (A)**

For semi-vertical angle α,

$$\tan\alpha = \frac{3}{4}$$

$$r = h \tan \alpha$$

$$\Rightarrow r = \frac{3h}{4}$$

$$V = \frac{1}{3}\pi r^2 h$$

$$\Rightarrow V = \frac{3\pi h^3}{16}$$

Differentiating with respect to time,

$$\frac{dV}{dt} = \frac{9\pi h^2}{16}\frac{dh}{dt}$$

For a depth of 10 m,

$$5 = \frac{9\pi \times 100}{16}\frac{dh}{dt}$$

$$\Rightarrow \frac{dh}{dt} = \frac{4}{45\pi}$$

Length along the slant surface:

$$l = \frac{h}{\cos\alpha}$$

$$\Rightarrow l = \frac{5h}{4}$$

$$\Rightarrow \frac{dl}{dt} = \frac{5}{4} \times \frac{4}{45\pi}$$

$$\Rightarrow \frac{dl}{dt} = \frac{1}{9\pi}\ \text{m/min}$$

IAPT answer: (A) | **Zigyan answer:** (A)

29. How many people should there be in a group such that there is more than half the probability, that two people from the group have their birthdays with the same date, irrespective of in which months they were born.

(A) 3 or more (B) 4 or more (C) 7 or more (D) 23 or more

Solution · Q29 **Answer: (C)**

A date of a month is one of 31 dates, taken as equally likely.

Probability that all n dates are different:

$$P(n) = \frac{31}{31} \times \frac{30}{31} \times \cdots \times \frac{32-n}{31}$$

Required condition:

$$1 - P(n) > 0.5$$

$$P(6) \approx 0.597$$

$$P(7) \approx 0.482$$

$$\Rightarrow 1 - P(7) \approx 0.518$$

Hence the group needs 7 or more people.

IAPT answer: (C) | **Zigyan answer:** (C)

30. A and B alternatively toss a coin. The one who gets a head first wins. If A starts the game, then what is the probability that A wins?

(A) $\frac{1}{2}$ (B) $\frac{2}{3}$
(C) $\frac{3}{4}$ (D) $\frac{3}{5}$

Solution · Q30 **Answer: (B)**

For a fair coin, A wins on the 1st, 3rd, 5th, ... toss.

$$P(A) = \frac{1}{2} + \left(\frac{1}{2}\right)^3 + \left(\frac{1}{2}\right)^5 + \cdots$$

$$\Rightarrow P(A) = \frac{\frac{1}{2}}{1 - \frac{1}{4}}$$

$$\Rightarrow P(A) = \frac{2}{3}$$

IAPT answer: (B) | **Zigyan answer:** (B)

31. Consider the expression $Z = 1 + 2^2 + (3^3)^3 + ((4^4)^4)^4 + \cdots$. From which term onwards, the total value of the expression Z exceeds 10^{1000}?

(A) 4 (B) 6 (C) 8 (D) 10

Solution · Q31 **Answer: (B)**

The nth term is:

$$T_n = n^{n^{n-1}}$$

$$\Rightarrow \log_{10} T_n = n^{n-1} \log_{10} n$$

$$\log_{10} T_5 = 625 \times 0.699 \approx 437$$

$$\log_{10} T_6 = 7776 \times 0.778 \approx 6050$$

The first five terms together stay far below 10^{1000}, while the sixth term alone is much larger than it.

So Z exceeds this value from the 6th term onwards.

IAPT answer: (B) | **Zigyan answer:** (B)

32. Let $A = \begin{bmatrix} a & b & c \\ b & c & a \\ c & a & b \end{bmatrix}$. Which of the following statements is <u>not</u> true?

(A) A is symmetric (B) If a + b + c = 0 then det A = 0
(C) det A = $a^3 + b^3 + c^3 - 3abc$ (D) det A = det A^T

Solution · Q32 **Answer: (C)**

$$A^T = A$$

So (A) is true.

Expanding the determinant,

$$\det A = 3abc - a^3 - b^3 - c^3$$

$$\Rightarrow \det A = -(a+b+c)(a^2+b^2+c^2-ab-bc-ca)$$

The first factor shows that (B) is true.

(D) is true, since transposing does not change a determinant.

(C) has the wrong sign, so it is not true.

IAPT answer: (C) | **Zigyan answer:** (C)

33. It has been four hours since Regulus (10h 08m, +11°58′) has crossed the local meridian at Mumbai (19°2′11.11″N, 72°51′34.09″ E). Which of the following stars will be closest to the meridian now?

(A) Arcturus (14h 16m 50.74s, 19°02′8")
(B) Sirius (6h 46m 15.1s, −16°44′. 6")
(C) Betelgeuse (5h 56m 31.86s, 19°02′8")
(D) Spica (13h 26m 32.96s, −11°17′44.7")

Solution · Q33 **As per Zigyan: (A)**

On the meridian, right ascension equals the local sidereal time (LST).

$$\text{LST} \approx 10\text{ h }08\text{ m} + 4\text{ h} = 14\text{ h }08\text{ m}$$

Gap between right ascension and LST:

Arcturus: about 9 min

Spica: about 41 min

Sirius: about 7 h 22 min

Betelgeuse: about 8 h 11 min

So Arcturus is closest to the meridian.

The declinations do not change this choice.

Check: In right ascension, Arcturus is 4 h 8 min 51 s east of Regulus, so it reaches the meridian about 9 minutes from now. Spica, 3 h 18 min 33 s east of Regulus, crossed it about 41 minutes ago.

IAPT answer: (A) | **Zigyan answer:** (A)

34. A star has an apparent magnitude of 10, and an Absolute magnitude of 10. How many parsecs away from the Earth is it?

(A) 100 (B) 10 (C) 1 (D) 0.1

Solution · Q34 **Answer: (B)**

Distance modulus, with d in parsec:

$$m - M = 5\log_{10}\left(\frac{d}{10}\right)$$

$$\Rightarrow 0 = 5\log_{10}\left(\frac{d}{10}\right)$$

$$\Rightarrow d = 10 \text{ pc}$$

IAPT answer: (B) | **Zigyan answer:** (B)

35. Which of the following statement or statements about stars are true?

(A) Among all one solar mass stars, the one with the largest radius is also the hottest.

(B) Type I supernovae are characterized by the absence of Hydrogen in the spectrum.

(C) Cooler stars show less absorption lines in their spectra.

(D) The stars are spectrally classified as O, B, A, F, G, K, M; with O type stars showing dense hydrogen line while M type stars having very less hydrogen lines.

Solution · Q35 **Answer: (B)**

(A) False. A one solar mass star is very large as a red giant, but its surface is then cool.

(B) True. Type I supernovae show no hydrogen lines, unlike Type II.

(C) False. Cooler stars show many absorption lines, including molecular bands.

(D) False. Hydrogen lines are strongest in A type stars and weak in O type stars.

IAPT answer: (B) | **Zigyan answer:** (B)

36. As seen from Earth, angular separation between Proxima Centauri and Alpha Centauri is 2.2°. What is the physical separation between the two stars?

(A) 4.25 light years (B) 0.16 light years (C) 2.2 light years (D) 0.33 light years

Solution · Q36 **As per Zigyan: (B)**

The distance, not given in the question, is taken as about 4.25 light years (ly) for the pair.

Angle in radian:

$$\theta = 2.2 \times \frac{\pi}{180} \approx 0.0384$$

Separation across the line of sight:

$$s \approx d\theta$$

$$\Rightarrow s \approx 4.25 \times 0.0384 \approx 0.16 \text{ ly}$$

Reference: NASA, Imagine the Universe, page 'The Nearest Neighbor Star': Proxima Centauri is at 4.25 light years and Alpha Centauri A and B are roughly 4.35 light years away.

Check: With 4.35 light years the same arc is about 0.17 light years, which again matches option (B).

IAPT answer: (B) | **Zigyan answer:** (B)

37. Two stars in a binary system are separated by 3.0 AU and have mass ratio of 2 : 1. Their orbital period is 6.0 years. What are the masses of the stars in terms of solar mass?

(A) 2.0, 1.0 (B) 0.50, 0.25 (C) 2.25, 1.125 (D) 1.78, 0.88

Solution · Q37 **Answer: (B)**

By Kepler's third law (AU, years, solar masses):

$$M_1 + M_2 = \frac{a^3}{T^2}$$

$$\Rightarrow M_1 + M_2 = \frac{3^3}{6^2} = 0.75$$

Also,

$$M_1 = 2M_2$$

$$\therefore M_1 = 0.50 \text{ and } M_2 = 0.25$$

IAPT answer: (B) | **Zigyan answer:** (B)

38. A comet's closest approach to Sun is at 1 AU. What is the radial component of its velocity at this position?

(A) 0 km/s (B) 21.2 km/s (C) 30 km/s (D) 42.4 km/s

Solution · Q38 **Answer: (A)**

At closest approach the distance r from the Sun is minimum.

$$\therefore dr/dt = 0$$

The velocity there is wholly perpendicular to the Sun–comet line.

So the radial component is 0 km/s.

IAPT answer: (A) | **Zigyan answer:** (A)

39. A new space station orbits the sun every four and a half years. In a particular year, it is seen on the local meridian at 1:00 am of the 21st of June, 2020. It will be again seen on the local meridian from the Earth, approximately, on

(A) 21 June, 2024, at 1:00 am (B) 20 December, 2024, at 4:00 pm

(C) 3 October, 2021, 4:00 pm (D) 21 March, 2021, 9:00 pm

Solution · Q39 **As per Zigyan: (C)**

Taking circular orbits in one plane, "seen again" means that the same Sun, Earth and station arrangement returns, after one synodic period S.

$$\frac{1}{S} = \frac{1}{1} - \frac{1}{4.5}$$

$$\Rightarrow S = \frac{9}{7} \text{ years}$$

$\Rightarrow S \approx 469.6$ days

Counted from 1:00 am on 21 June 2020, this period ends on 3 October 2021, at about 4:00 pm.

That clock time marks the end of the period. The station itself crosses the local meridian near 1:00 am.

Check: In nine sevenths of a year the Earth makes nine sevenths of a revolution and the station two sevenths, so the Earth gains exactly one full revolution.

IAPT answer: (C) | **Zigyan answer:** (C)

40. What is the advantage of an equatorial telescope mount over an alt-azimuth mount?

(A) Reduced vibrations and provides a more stable viewing platform.

(B) It allows tracking celestial objects using only one axis of motion.

(C) It eliminates the need for polar alignment before observing.

(D) It is easier to carry and transport due to its lightweight design.

Solution · Q40 **Answer: (B)**

One axis of an equatorial mount is set parallel to the Earth's rotation axis.

After this polar alignment, turning only that axis follows a star. An alt-azimuth mount has to move about both axes.

IAPT answer: (B) | **Zigyan answer:** (B)

41. Which of the following statements is correct about constellations?

(A) Any star cannot belong to two constellations simultaneously.

(B) Only the bright stars which are imagined as some figure in the sky make constellations.

(C) Brightest star in any constellation has magnitude 1.

(D) There are only 12 constellations along the Ecliptic belt.

Solution · Q41 **Answer: (A)**

(A) IAU constellation boundaries divide the whole sky without overlap, so a star lies in only one constellation; true.

(B) A constellation is a whole region of sky, faint stars included; false.

(C) In many constellations the brightest star is fainter than magnitude 1; false.

(D) The Ecliptic passes through 13 constellations, including Ophiuchus; false.

IAPT answer: (A) | **Zigyan answer:** (A)

42. What would be the speed of a comet, on a parabolic orbit around the sun, whose point of closest approach is 1AU, when at a distance of 4.0 AU?

Physical constants you may need....

Universal gravitational constant G = 6.67×10^{-11} Nm^2/kg^2

Astronomical unit = 1.50×10^{11} m

Mass of Sun M = 2.0×10^{30} kg

(A) 42.1 km/s (B) 29.8 km/s (C) 21.1 km/s (D) 84.4 km/s

Solution · Q42 **Answer: (C)**

The total energy in a parabolic orbit is zero.

$$\frac{1}{2}mv^2 = \frac{GMm}{r}$$

$$\Rightarrow v = \sqrt{\frac{2GM}{r}}$$

At 4.0 AU from the Sun:

$$v = \sqrt{\frac{2 \times 6.67 \times 10^{-11} \times 2.0 \times 10^{30}}{4 \times 1.5 \times 10^{11}}}$$

$$\Rightarrow v \approx 21.1 \text{ km/s}$$

IAPT answer: (C) | **Zigyan answer:** (C)

43. Globular clusters are typically found in the halo of Milky Way. In which of the following constellation, there are higher chances of seeing globular cluster?

(A) Orion (B) Sagittarius (C) Ursa Minor (D) Virgo

Solution · Q43 **Answer: (B)**

The globular cluster system of the Milky Way is centred on the centre of the Galaxy, not on the Sun.

That centre lies towards Sagittarius, so many more of these clusters are seen in that part of the sky.

IAPT answer: (B) | **Zigyan answer:** (B)

44. Ecliptic plane makes approximately 60° with the Milky Way plane. One point of intersection lies in the constellation of Sagittarius, in which constellation does the other intersection point lie?

(A) Aquarius (B) Libra (C) Pieces (D) Gemini

Solution · Q44 **Answer: (D)**

The planes of the Ecliptic and the Milky Way meet along a line, so the two crossing points are 180° apart.

Going 180° along the Ecliptic from the Sagittarius point leads to the Gemini–Taurus border.

Among the options, this is Gemini.

IAPT answer: (D) | **Zigyan answer:** (D)

45. Which of the following places will have minimum duration between the two zero shadow days in a given calendar year.

(A) Manila (14° 36′ N, 120° 59′ E) (B) Monteiro (7° 53′ S, 37° 7′ W)

(C) Kansanshi (12° 6′ S, 26° 26′ W) (D) Barah (13° 42′ N, 30° 22′ E)

Solution · Q45 **Answer: (A)**

A zero shadow day occurs when the Sun's declination equals the latitude of the place.

For a southern place, the two such days of a calendar year are more than six months apart.

For a northern place they lie on either side of the June solstice, and the gap shrinks as the latitude nears the Tropic of Cancer.

Manila (14° 36′ N) is nearer to the Tropic of Cancer than Barah (13° 42′ N), so its gap is the smallest.

IAPT answer: (A) | **Zigyan answer:** (A)

46. An observer from Delhi, will see the Sun on the local meridian 365 times in the year 2025. A star, located on the celestial equator, will be seen how many times on the local meridian by the same observer in 2025?

(A) 364 (B) 365 (C) 366 (D) 367

Solution · Q46 **Answer: (C)**

As the Earth also goes round the Sun, a year has one more sidereal day than its number of solar days.

Sidereal days in 365 solar days:

$$365 \times \frac{366.25}{365.25} \approx 366$$

The star crosses the local meridian once in each sidereal day.

IAPT answer: (C) | **Zigyan answer:** (C)

47. Considering the nuclear reactions that power the energy output of the stars, the correct statements is:

(A) the p-p chain is the dominant process that creates He in very massive stars.

(B) the fusion of H into He is an exothermic process.

(C) the CNO (Carbon-Nitrogen-Oxygen) cycle results in the creation of the elements like Si, S and P following the fusion of the lighter elements.

(D) the fusion process is replaced by the fission process in heavier stars.

Solution · Q47 **Answer: (B)**

(A) In very massive stars the CNO cycle dominates over the p-p chain; false.

(B) A He nucleus has less mass than the four H nuclei that form it, and the difference is released as energy; true.

(C) The CNO cycle only turns H into He, with C, N and O acting as catalysts; false.

(D) Heavier stars are also powered by fusion, not fission; false.

IAPT answer: (B) | **Zigyan answer:** (B)

48. Which of the following constellations is broken in two disjoint parts in the sky?

(A) Draco (B) Ursa (C) Serpens (D) Eridanus

Solution · Q48 **Answer: (C)**

Serpens is in two separate parts, Serpens Caput (head) and Serpens Cauda (tail).

Ophiuchus lies between them.

IAPT answer: (C) | **Zigyan answer:** (C)

PART A-2 · ONE OR MORE CORRECT OPTIONS

Q. 49 – 60 · 6 marks only if all correct options are marked · no negative marking

49. Inside a cylindrical well, at the bottom and touching the wall, a red ball is thrown at an angle of 45° to the horizontal towards the diametrically opposite end of the wall, and it hits the wall after a time interval of $\frac{v\sqrt{2}}{g}$, where v is the magnitude of velocity of the red ball and g is acceleration due to gravity. A black ball identical in shape and mass to the red ball is thrown vertically upwards from the bottom of the well with a kinetic energy half of that of the red ball. A green ball having a mass half of the red ball is thrown from the bottom of the well but diametrically opposite to the red ball with a kinetic energy half of that of the red ball. All the balls, if and when they hit the wall, undergo completely elastic collision.

(A) The red ball bounces off the bottom of the well for the first time when it hits the wall the third time.

(B) The black ball will take double the time to hit the bottom of the well to that of the red ball.

(C) The green ball hits the bottom of the well at the same spot as the red ball.

(D) The green ball will take the same time as the red ball to hit the bottom of the well the first time.

Solution · Q49 **As per Zigyan: (D)**

Time of flight of the red ball:

$$T = \frac{2v\sin 45^\circ}{g} = \frac{\sqrt{2}\,v}{g}$$

This equals the given time, so it meets the wall at floor level.

(A) Hence it bounces off the bottom at the first wall hit itself: false.

For the black ball (same mass, half the kinetic energy):

$$u = \frac{v}{\sqrt{2}}$$

$$\Rightarrow T_b = \frac{2u}{g} = \frac{\sqrt{2}\,v}{g}$$

(B) The times are equal: false.

Green ball, thrown like the red one at 45° towards the other side:

$$\frac{1}{2}\left(\frac{m}{2}\right)v_g^2 = \frac{1}{2}\left(\frac{1}{2}mv^2\right)$$

$$\Rightarrow v_g = v$$

(C) It first lands at the red ball's starting point, the red ball at the opposite one: false.

(D) Same speed and angle give the same time: true.

Reference: NCERT Physics Class XI (Part I), Chapter 3 'Motion in a Plane', section 3.9 'Projectile motion': time of flight is twice the speed times the sine of the projection angle, divided by g, and the range is the horizontal distance covered in that time.

Check: the red ball's height at the given time works out to zero, so it reaches the wall and the floor together.

IAPT answer: (D) | **Zigyan answer:** (D)

50. Read the two statements, I and II, about a RLC series circuit driven by an AC voltage source using an inductor having internal resistance r. Assume that the maximum amplitude of ac signal is v_m and frequency is F:

I: when frequency F is equal to the resonance frequency of the circuit, potential difference across the series combination of L and C has a non-zero amplitude.

II: when frequency F is equal to the resonance frequency of the circuit, current in the circuit has amplitude less than v_m/R.

Select correct statement(s) from the following:

(A) If statement I is correct, statement II has to be correct.

(B) If statement II is false, statement I cannot be false.

(C) Statement II is false for most of the RLC series circuits with ac voltage source.

(D) Statement I is correct for most of the RLC series circuits with ac voltage source.

Solution · Q50 **Answer: (A), (D)**

At resonance:

$$X_L = X_C$$

$$I_m = \frac{v_m}{R + r}$$

Amplitude across the L and C combination, which includes r:

$$V_{LC} = I_m r$$

So I and II are both true when r is not zero, and both false when r is zero.

(A) True.

(B) If II is false, r is zero, so I is false: wrong.

A real inductor has some resistance.

(C) Hence II holds in most circuits: wrong.

(D) I also holds in most circuits: true.

IAPT answer: (A), (D) | **Zigyan answer:** (A), (D)

51. Two current carrying wires A and B are held fixed, parallel to each other, at a distance of 1.8 m. A current of 3A flows through wire A in a direction, coming out of the plane of paper and that through the wire B is 9A going in to the plane of paper as shown.

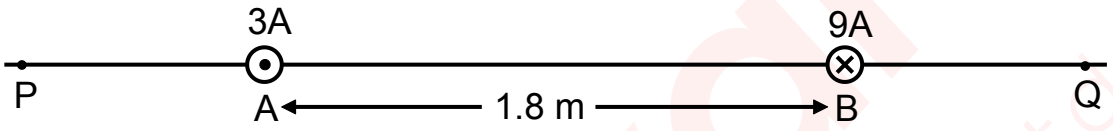

Which of the following statement(s) is/are true with reference to the given situation?

(A) There can be a point on the left of wire A (PA side) where net magnetic field is zero.

(B) There can be a point on the right of wire B (BQ side) where net magnetic field is zero.

(C) There can be a point between the wires A and B, closer to A, where magnetic field produced by the two wires will be in the same direction having equal magnitude.

(D) There can be a point Q on the right of wire B (BQ side) where net magnetic field is in the upward direction parallel to the plane of paper.

Solution · Q51 **Answer: (A), (C)**

Currents are opposite, so a null point can lie only outside, near the smaller current.

At distance x to the left of A:

$$\frac{3}{x} = \frac{9}{x + 1.8}$$

$$\Rightarrow x = 0.9 \text{ m}$$

(A) True.

(B) Right of B, the 9 A wire is stronger and nearer: no null point. False.

Between the wires both fields are upward. For equal magnitudes, at distance y from A:

$$\frac{3}{y} = \frac{9}{1.8 - y}$$

$$\Rightarrow y = 0.45 \text{ m}$$

(C) True.

(D) Right of B, the downward field of B is larger, so the net field is downward. False.

IAPT answer: (A), (C) | **Zigyan answer:** (A), (C)

52. Two black bodies A and B are emitting in the approximate ratio 2:5. Which of the following statements may be correct from the given information?

(A) Body B is 20% hotter and 10% larger in diameter than body A.

(B) Body B is 50% hotter but half in diameter than body A.

(C) Body B is 10% hotter and 30% larger in diameter than body A.

(D) Body B has double the temperature of A and only 40% diameter of body A.

Solution · Q52 **Answer: (A), (C), (D)**

For a black body, power emitted:

$$P \propto D^2T^4$$

Required:

$$\frac{P_B}{P_A} = \frac{5}{2} = 2.5$$

(A) $(1.1)^2(1.2)^4 \approx 2.51$

(B) $(0.5)^2(1.5)^4 \approx 1.27$

(C) $(1.3)^2(1.1)^4 \approx 2.47$

(D) $(0.4)^2(2)^4 = 2.56$

All except (B) are close to the required ratio.

IAPT answer: (A), (C), (D) | **Zigyan answer:** (A), (C), (D)

53. Let $\delta = \begin{vmatrix} x & x^2 & 1 \\ 1 & x & x^2 \\ x^2 & 1 & x \end{vmatrix}$. Which of the following statements is not true?

(A) δ is an even function

(B) $\delta = 0$ for all real x

(C) δ is a polynomial of degree 6

(D) If $x = \sqrt[3]{1}$, $\delta = 0$ for all roots

Solution · Q53 **Answer: (A), (B)**

Expanding along the first row:

$$\delta = x(x^2 - x^2) - x^2(x - x^4) + (1 - x^3)$$

$$\Rightarrow \delta = (x^3 - 1)^2$$

(A) $\delta(-x)$ differs from $\delta(x)$, so δ is not even: not true.

(B) The only real zero is at 1: not true.

(C) The degree is 6: true.

(D) Each cube root of unity satisfies:

$$x^3 = 1$$

Hence δ vanishes: true.

IAPT answer: (A), (B) | **Zigyan answer:** (A), (B)

54. Which of the following functions are periodic?

(A) $\sin x + \cos x$

(B) $\tan x$

(C) $x \sin x$

(D) $\sin x + \sin\sqrt{2}\, x$

Solution · Q54 **Answer: (A), (B)**

(A) Period 2π: periodic.

(B) Period π: periodic.

(C) The amplitude x grows without bound: not periodic.

(D) Periods of the two terms:

$$T_1 = 2\pi \text{ and } T_2 = \sqrt{2}\,\pi$$

$$\frac{T_1}{T_2} = \sqrt{2}$$

The ratio is irrational, so there is no common period: not periodic.

IAPT answer: (A), (B) | **Zigyan answer:** (A), (B)

55. If $x + \frac{1}{x} = 2$ then which of the following are true?

(A) $x^2 + \frac{1}{x^2} = 2$

(B) $x^3 + \frac{1}{x^3} = 2$

(C) $x = 1$

(D) $x^4 + \frac{1}{x^4} = 2$

Solution · Q55 **Answer: (A), (B), (C), (D)**

$$x + \frac{1}{x} = 2$$

$$\Rightarrow (x-1)^2 = 0$$

$$\Rightarrow x = 1$$

Hence, for every positive integer n:

$$x^n + \frac{1}{x^n} = 2$$

All four statements are true.

IAPT answer: (A), (B), (C), (D) | **Zigyan answer:** (A), (B), (C), (D)

56. Which of the following series are not convergent?

(A) $\sum_{n=1}^{\infty} \left(1 + \frac{1}{n}\right)$

(B) $\sum_{n=1}^{\infty} \left(3 + \left(\frac{2}{3}\right)^n\right)$

(C) $\sum_{n=1}^{\infty} n^{1/n}$

(D) $\sum_{n=1}^{\infty} \frac{1}{n(n+1)}$

Solution · Q56 **Answer: (A), (B), (C)**

A series diverges if its nth term does not tend to zero.

nth terms:

$$\text{(A) } 1 + \frac{1}{n} \to 1$$

$$\text{(B) } 3 + \left(\frac{2}{3}\right)^n \to 3$$

(C) $n^{1/n} \to 1$

(D) The series telescopes:

$$\frac{1}{n(n+1)} = \frac{1}{n} - \frac{1}{n+1}$$

Its sum is 1, so it converges.

IAPT answer: (A), (B), (C) | **Zigyan answer:** (A), (B), (C)

57. The Pole star

(A) can be seen at night from all locations on the Earth.

(B) will be visible during a solar eclipse from nearly the whole of the northern hemisphere.

(C) will be visible during a solar eclipse from the equator.

(D) can, in principle, be observed from India anytime during the day and night.

Solution · Q57 **As per Zigyan: (D)**

(A) It is below the horizon in southern latitudes: false.

(B) The sky darkens only along the narrow path of totality. Elsewhere in daylight the eclipse is partial or absent: false.

(C) At the equator it lies practically on the horizon, so it is not seen: false.

(D) From India its altitude is nearly the latitude, so it never sets: true.

Why Zigyan differs from IAPT: (B) needs a dark sky over nearly the whole northern hemisphere, but a solar eclipse is total only in a very small region.

Reference: NASA Science, 'Why Do Eclipses Happen?' and 'Types of Solar Eclipses': the total eclipse area is much smaller than the partial one, a typical central shadow path may be under 50 miles wide, and people outside the inner shadow see only a partial eclipse.

Reference: OpenStax Astronomy 2e, section 2.1 'The Sky Above': the altitude of the celestial pole equals the observer's latitude, so at the equator the poles lie on the horizon.

IAPT answer: (B), (D) | **Zigyan answer:** (D)

58. An observer measures the location of the Sun, moon, planets, and bright stars like Sirius, very diligently. The correct conclusions that she may reach is/are:

(A) Planets rise and set at the same time as per the sidereal clock but not as per the solar clock for all days of the year.

(B) The Sun rises and sets at the same time as per the solar clock and not as per the sidereal clock for all days of the year.

(C) The stars rise and set at the same time as per the sidereal clock but not as per the solar clock for all days of the year.

(D) The moon rises and sets at different times as per the sidereal clock and also as per the solar clock for all days of the month.

Solution · Q58 **Answer: (C), (D)**

A star has practically fixed right ascension and declination, so it rises and sets at fixed sidereal times.

A sidereal day is about 4 minutes shorter than a solar day, so the solar times shift daily.

(A) Planets move among the stars, so their sidereal times change: false.

(B) The Sun's declination changes during the year, so its solar times of rising and setting change: false.

(C) True.

(D) The Moon moves quickly among the stars, so both times change daily: true.

IAPT answer: (C), (D) | **Zigyan answer:** (C), (D)

59. Which of the following stars is/are circumpolar in Warsaw (52°14'N 21°01'E)

(A) α Cygni (16h 41m, +31°36′)
(B) β Böotis (15h 01m, +40°23′)
(C) θ Aurigae (5h 59m, +37°12′)
(D) γ Draconis (17h 56m, +51°26′)

Solution · Q59 **As per Zigyan: (B), (D)**

Using the printed coordinates and neglecting refraction, a northern star is circumpolar if:

$$\delta > 90° - 52°14'$$

$$\Rightarrow \delta > 37°46'$$

(A) +31°36′ is smaller: not circumpolar.

(B) +40°23′ is larger: circumpolar.

(C) +37°12′ is smaller: not circumpolar.

(D) +51°26′ is larger: circumpolar.

Reference: OpenStax Astronomy 2e, section 2.1 'The Sky Above': the pole's altitude equals the latitude, and stars within that angle of the north celestial pole never set.

Check: lowest altitude (latitude plus declination minus 90°) comes to −6°10′, +2°37′, −0°34′ and +13°40′, so only the second and fourth stars stay up.

IAPT answer: (B), (D) | **Zigyan answer:** (B), (D)

60. Star A rises half an hour before star B and it sets half an hour after star B from a particular location. Which of the following statement(s) is/are correct?

(A) The location is on equator.
(B) The location is in southern hemisphere and star A is more south than star B.
(C) The location is in northern hemisphere and star A is more north than star B.
(D) Both stars have the same right ascension.

Solution · Q60 **As per Zigyan: (B), (C), (D)**

(B) and (C) are taken as the two possible cases.

Sidereal times of rising and setting (H is the semi-diurnal arc):

α − H and α + H

Given data:

$$\alpha_A - H_A = \alpha_B - H_B - 0.5\ \text{h}$$

$$\alpha_A + H_A = \alpha_B + H_B + 0.5\ \text{h}$$

$$\Rightarrow \alpha_A = \alpha_B$$

$$\Rightarrow H_A - H_B = 0.5\ \text{h}$$

(D) True. Also, at latitude ϕ and declination δ:

$$\cos H = -\tan \phi \tan \delta$$

(A) On the equator every H is 6 h: false.

A has the larger H, so:

$$\tan \phi \tan \delta_A > \tan \phi \tan \delta_B$$

(B) South of the equator, A must be farther south: correct.

(C) North of the equator, A must be farther north: correct.

Check: the midpoint of rising and setting is the meridian crossing. It is common to both stars, so their right ascensions are equal.

IAPT answer: (B), (C), (D) | **Zigyan answer:** (B), (C), (D)

ANSWER KEY

NSEA 2025 · PAPER CODE 41

60
QUESTIONS · 216 MARKS

IAPT final answer key for paper code 41. ★ marks an answer given as per Zigyan.

1	(D)★	2	(D)	3	(B)	4	(A)	5	(B)
6	(D)	7	(A)	8	(D)	9	(C)	10	(B)
11	(B)	12	(C)	13	(A)	14	(D)	15	(D)
16	(D)★	17	(C)	18	(D)	19	(B)	20	(B)
21	(B)	22	(C)	23	(D)★	24	(C)	25	(B)
26	(C)	27	(D)	28	(A)	29	(C)	30	(B)
31	(B)	32	(C)	33	(A)★	34	(B)	35	(B)
36	(B)★	37	(B)	38	(A)	39	(C)★	40	(B)
41	(A)	42	(C)	43	(B)	44	(D)	45	(A)
46	(C)	47	(B)	48	(C)	49	(D)★	50	(A), (D)
51	(A), (C)	52	(A), (C), (D)	53	(A), (B)	54	(A), (B)	55	(A), (B), (C), (D)
56	(A), (B), (C)	57	(D)★	58	(C), (D)	59	(B), (D)★	60	(B), (C), (D)★

★ Answers as per Zigyan

- **Q1** — As per Zigyan: (D); IAPT key (D).
- **Q16** — As per Zigyan: (D); IAPT key (D).
- **Q23** — As per Zigyan: (D); IAPT key (B) or (D).
- **Q33** — As per Zigyan: (A); IAPT key (A).
- **Q36** — As per Zigyan: (B); IAPT key (B).
- **Q39** — As per Zigyan: (C); IAPT key (C).
- **Q49** — As per Zigyan: (D); IAPT key (D).
- **Q57** — As per Zigyan: (D); IAPT key (B), (D).
- **Q59** — As per Zigyan: (B), (D); IAPT key (B), (D).
- **Q60** — As per Zigyan: (B), (C), (D); IAPT key (B), (C), (D).

zigyan

OLYMPIADS · 2026

Olympiad results



TOP ACHIEVEMENT · CHEMISTRY

Qualified the Chemistry Olympiad twice, and selected for the HBCSE camp.

Saksham Bishnoi reached the national stage of the Chemistry Olympiad in two consecutive years and was selected for the Orientation-cum-Selection Camp at HBCSE, Mumbai. 4 Years Classroom - the same student who took AIR 168 in JEE Advanced 2026.

Qualified twice | HBCSE selection camp | Only student from Faridabad

Above MAS means above the **Minimum Admissible Score**: clearing it puts a student in the national band for their subject. It is a real threshold, not a participation marker.

CHEMISTRY · ABOVE MAS



Sulokya Bibhuty
Class XII
3 Years Classroom
Above MAS



Anay Gupta
Class XI
3 Years Classroom
Above MAS



Akshat Khator
Class XI
3 Years Classroom
Above MAS



Harshit Goyal
Class XII
4 Years Classroom
Above MAS



Hardik Sharma
Class XI
3 Years Classroom
Above MAS



Aarush Kumar
Class XII
1 Year Classroom
Above MAS

PHYSICS · ASTRONOMY · MATHEMATICS

PHYSICS



Sulokya Bibhuty
Class XII
3 Years Classroom
Above MAS

PHYSICS



Saksham Bishnoi
Class XII
4 Years Classroom
Above MAS

ASTRONOMY



Sulokya Bibhuty
Class XI
3 Years Classroom
Above MAS

MATHEMATICS · IOQM



Priyanshi
Class XI
4 Years Classroom
IOQM Qualifier

OLYMPIADS WE PREPARE STUDENTS FOR

NSEP	NSEC	NSEB	NSEA	IOQM	NSEJS
Physics	Chemistry	Biology	Astronomy	Mathematics	Class X and below

The olympiad pathway starts in Class 8.

NSEJS is open to Class 10 and below - the habit of staying with one hard problem is the one JEE Advanced rewards.

Zigyan Eduvision Pvt. Ltd. · SCO No. 107, Sector 16, Faridabad 121002
0129-4048800 · +91 92115 38800 · info@zigyan.com

zigyan

RESULTS · 2021 – 2026

Our toppers, year by year

40
JEE Advanced selections in 6 years

AIR 168
best rank — Saksham Bishnoi, 2026

16 of 35
students selected, JEE Advanced 2026

14 of 35
above 98 percentile, JEE Main 2026

JEE ADVANCED SELECTIONS PER YEAR

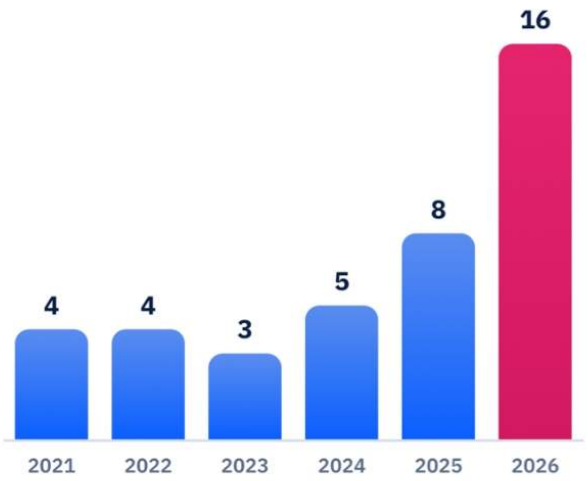

BEST RANK EACH YEAR

YEAR	JEE ADVANCED	JEE MAIN
2026	**Saksham Bishnoi** AIR 168 · 4 Years Classroom	**Saksham Bishnoi** AIR 811 · 99.95 %ile
2025	**Chakshu** AIR 4,233 · 2 Years Classroom	**Chakshu** AIR 8,538 · 99.44 %ile
2024	**Harshit** AIR 777 · 2 Years Classroom	**Harshit** AIR 1,473 · 99.91 %ile
2023	**Aditya Jain** AIR 2,373 · 2 Years Classroom	**Aditya Jain** AIR 2,503 · 99.79 %ile
2022	**Rachit Sharma** AIR 698 · 1 Year Classroom	**Rachit Sharma** AIR 1,016 · 99.90 %ile
2021	**Sparsh Mittal** AIR 2,237 · 1 Year Classroom	**Sparsh Mittal** AIR 1,562

JEE ADVANCED 2026 — THIRTEEN NAMED SELECTIONS



Saksham Bishnoi
AIR 168
4 Years Classroom



Sulokya Bibhuty
AIR 1,315
3 Years Classroom



Aarush
AIR 2,699
1 Year Classroom



Manishka
AIR 2,869
4 Years Classroom



Oojit Kumar
AIR 5,765
4 Years Classroom



Harshit Goyal
AIR 6,407
4 Years Classroom



Pranab Sharma
AIR 6,750
3 Years Classroom



Aditya Dhar
AIR 15,183
3 Years Classroom



Arpit Anshuman
AIR 19,308
4 Years Classroom



Lokesh
AIR 22,857
3 Years Classroom



Arjun
AIR 24,674
3 Years Classroom



Sanyam Gulyani
AIR 25,123
1 Year Classroom



Saket
AIR 27,628
3 Years Classroom

Sixteen students of the 2026 batch were selected in JEE Advanced; the thirteen above are named with their All India Rank.

JEE MAIN 2026 — TOP SIX, WITH PERCENTILE



Saksham Bishnoi
AIR 811
99.95 %ile
4 Years Classroom



Sulokya Bibhuty
AIR 1,095
99.94 %ile
3 Years Classroom



Harshit Goyal
AIR 2,662
99.83 %ile
4 Years Classroom



Manishka
AIR 4,817
99.70 %ile
4 Years Classroom



Oojit Kumar
AIR 5,040
99.69 %ile
4 Years Classroom



Aarush
AIR 5,276
99.67 %ile
1 Year Classroom

14 of the 35 students in the 2026 batch scored above the 98th percentile in JEE Main.

Zigyan Eduvision Pvt. Ltd. · SCO No. 107, Sector 16, Faridabad 121002
0129-4048800 · +91 92115 38800 · info@zigyan.com