zigyan

PREVIOUS YEAR PAPER · 2019

OLYMPIAD · STAGE I

NSEJS

National Standard Examination in Junior Science

2019

Question paper with official answer key

80	240	120 min	51
Questions	Maximum marks	Time	Paper code

Question paper and official answer key: Indian Association of Physics Teachers (IAPT), NSEJS 2019, paper code 51.
Solutions and notes: Zigyan. This booklet is not an IAPT publication.

Prepare for the Olympiads with Zigyan

www.zigyan.com

zigyan

SCO No. 107, Sector 16, Faridabad, Haryana 121002
0129-4048800 · +91 92115 38800 · info@zigyan.com

zigyan

JEE 2026 RESULTS

OUR TOPPERS

When talent meets the right guidance.

Saksham Bishnoi and Sulokya Bibhuty - our JEE 2026 toppers from Zigyan, Sector 16 - with the programme they took and the rank they earned.



Rahul Kaushik Sir
Founder & Director, Zigyan Eduvision
23 years of teaching



Saksham Bishnoi

4 YEARS CLASSROOM

JEE ADVANCED 2026	JEE MAIN 2026
AIR 168	AIR 811
	99.95 percentile



Sulokya Bibhuty

3 YEARS CLASSROOM

JEE ADVANCED 2026	JEE MAIN 2026
AIR 1,315	AIR 1,095
	99.94 percentile

OLYMPIAD RESULTS

Above the Minimum Admissible Score - the national band for the subject

CHEMISTRY

- Sulokya Bibhuty — 3 Years Classroom
- Anay Gupta — 3 Years Classroom
- Akshat Khator — 3 Years Classroom
- Harshit Goyal — 4 Years Classroom
- Hardik Sharma — 3 Years Classroom
- Aarush Kumar — 1 Year Classroom

PHYSICS

- Sulokya Bibhuty — 3 Years Classroom
- Saksham Bishnoi — 4 Years Classroom

ASTRONOMY

- Sulokya Bibhuty — 3 Years Classroom

MATHEMATICS (IOQM)

- Priyanshi — 4 Years Classroom

Saksham Bishnoi qualified the Chemistry Olympiad twice and was selected for the Orientation-cum-Selection Camp at HBCSE, Mumbai.

16 selections	16 of 35	AIR 168
in JEE Advanced 2026	students of the batch selected	best JEE Advanced rank

Start where they started.

Register for ZEST - ₹200 · www.zigyan.com/scholarship/zest

+91 92115 38800
info@zigyan.com

PART A-1 · ONE CORRECT OPTION

Q. 1 – 80 · +3 for a correct answer, –1 for a wrong one

1. Let α and β be the roots of $x^2 - 5x + 3 = 0$ with $\alpha > \beta$. If $a_n = \alpha^n - \beta^n$ for $n \geq 1$ then the value of $\frac{3a_6 + a_8}{a_7}$ is

(A) 2 (B) 3 (C) 4 (D) 5

2. The number of triples (x, y, z) such that any one of these numbers is added to the product of the other two, the result is 2, is

(A) 1 (B) 2 (C) 4 (D) infinitely many

3. In rectangle ABCD, AB=5 and BC=3. Points F and G are on the line segment CD so that DF = 1 and GC=2. Lines AF and BG intersect at E. What is the area of AEB?

(A) 10 sq. units (B) 15/2 sq. units (C) 25/2 sq. units (D) 20 sq. units

4. In the given figure, two concentric circles are shown with centre O. PQRS is a square inscribed in the outer circle. It also circumscribes the inner circle, touching it at points B, C, D and A. What is the ratio of the perimeter of the outer circle to that of quadrilateral ABCD?

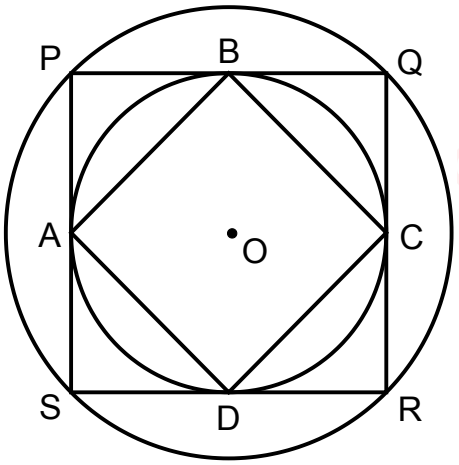

(A) $\frac{\pi}{4}$ (B) $\frac{3\pi}{2}$
(C) $\frac{\pi}{2}$ (D) π

5. How many positive integers N give a remainder 8 when 2008 is divided by N.

(A) 12 (B) 13 (C) 14 (D) 15

6. What is the product of all the roots of the equation $\sqrt{5|x| + 8} = \sqrt{x^2 - 16}$?

(A) – 64 (B) – 24 (C) 576 (D) 24.

7. LCM of two numbers is 5775. Which of the following cannot be their HCF?

(A) 175 (B) 231 (C) 385 (D) 455

8. If a, b, c are distinct real numbers such that $a + \frac{1}{b} = b + \frac{1}{c} = c + \frac{1}{a}$ evaluate abc.

(A) $\pm\sqrt{2}$ (B) $\sqrt{2} - 1$
(C) $\sqrt{3}$ (D) ±1

9. If the equation $(\alpha^2 - 5\alpha + 6)x^2 + (\alpha^2 - 3\alpha + 2)x + (\alpha^2 - 4) = 0$ has more than two roots, then the value of α is

(A) 2 (B) 3 (C) 1 (D) none of these

10. Mr. X with his eight children of different ages is on a family trip. His oldest child, who is 9 years old saw a license plate with a 4-digit number in which each of two digits appear two times. "Look daddy!" she exclaims. "That number is evenly divisible by the age of each of us kids!" "That's right," replies Mr. X, "and the last two digits just happen to be my age". Which of the following is not the age of one of Mr. X's children?

(A) 4 (B) 5 (C) 6 (D) 7

11. How many numbers lie between 11 and 1111 which divided by 9 leave a remainder 6 and when divided by 21 leave a remainder 12?

(A) 18 (B) 28 (C) 8 (D) None of these

12. Two unbiased dice are rolled. What is the probability of getting a sum which is neither 7 nor 11?

(A) 7/9 (B) 7/18 (C) 2/9 (D) 11/18

13. The solution of the equation $1 + 4 + 7 + ... + x = 925$ is

(A) 73 (B) 76 (C) 70 (D) 74

14. If $\tan\theta + \sec\theta = 1.5$, then value of $\sin\theta$ is

(A) $\frac{5}{13}$ (B) $\frac{12}{13}$
(C) $\frac{3}{5}$ (D) $\frac{2}{3}$

15. An observer standing at the top of a tower, finds that the angle of elevation of a red bulb on the top of a light house of height H is α. Further, he finds that the angle of depression of reflection of the bulb in the ocean is β. Therefore, the height of the tower is

(A) $\frac{H(\tan\beta - \tan\alpha)}{(\tan\beta + \tan\alpha)}$ (B) $\frac{H\sin(\beta - \alpha)}{\cos(\alpha + \beta)}$
(C) $\frac{H(\cos\alpha - \cos\beta)}{(\cot\alpha + \cot\beta)}$ (D) H

16. The sum of the roots of $\frac{1}{x+a} + \frac{1}{x+b} = \frac{1}{c}$ is zero. The product of roots is

(A) 0 (B) $\frac{a+b}{2}$
(C) $-\frac{1}{2}(a^2 + b^2)$ (D) $2(a^2 + b^2)$

17. In the convex quadrilateral ABCD, the diagonals AC and BD meet at O and the measure of angle AOB is 30°. If the areas of triangle AOB, BOC, COD and AOD are 1, 2, 8 and 4 square units respectively, what is the product of the lengths of the diagonals AC and DB in sq. units?

(A) 60 (B) 56 (C) 54 (D) 64

18. If $\sin^2 x + \sin^2 y + \sin^2 z = 0$, then which of the following is NOT a possible value of $\cos x + \cos y + \cos z$?

(A) 3 (B) −3 (C) −1 (D) −2

19. Find the remainder when x^{51} is divided by $x^2 - 3x + 2$.

(A) x

(B) $(2^{51} - 2)x + 2 - 2^{51}$

(C) $(2^{51} - 1)x + 2 - 2^{51}$

(D) 0

20. In an equilateral triangle, three coins of radii 1 unit each are kept so that they touch each other and also sides of the triangle. The area of triangle ABC (in sq. units) is

(A) $4 + 2\sqrt{3}$

(B) $4\sqrt{3} + 6$

(C) $12 + \frac{7\sqrt{3}}{4}$

(D) $3 + \frac{7\sqrt{3}}{4}$

21. Gymnosperms are called 'naked seed bearing plants' because they lack:

(A) Male gamete (B) Ovule (C) Ovary (D) Seeds

22. In case of mice coat colour, two genes are responsible for colour of the hair. Gene 'A' is responsible for distribution of pigments on shaft of hair. Wild type allele of 'A' produces a yellow band on dark hair shaft (agouti), whereas recessive allele produces no yellow band. There is another allele of A, known as A^Y, which is embryonic lethal in homozygous condition only. In an experiment, two yellow mice were crossed to obtain a progeny of 6 pups. What would be the most probable number of agouti mice among them?

(A) 0

(B) 2

(C) 4

(D) None of the above

23. A stain was developed by a group of scientists to stain a particular cell organelle. The stain was tested on various tissues derived from an autopsy sample from a mammal. The organelles were counted. The results showed maximum number of the organelles in cells of brain, lesser in cells of heart, least in mature sperms and absent in erythrocytes. Identify the organelles from following options.

(A) Nissl bodies

(B) Mitochondria

(C) Golgi bodies

(D) Endoplasmic reticulum

24. *Pinus sylvestris* grows at low temperatures in Russia. The plant survives under such freezing conditions due to the presence of:

(A) Saturated lipids in plasma membrane

(B) Glycoproteins in plasma membrane

(C) Glycolipids in plasma membrane

(D) Polyunsaturated lipids in plasma membrane

25. In an experimental setup, certain pathogen caused a disease in primates with nasal congestion, sore throat and fever being the common symptoms. The scientists injected an extract from blue-green mold as the first line of action. However, the symptoms did not subside. The possible causative agents of the disease were listed out as follows.

i. a virus

ii. a fungus

iii. a conjugation deficient bacterium

iv. a tapeworm

Choose the correct option from the following that indicate the pathogen.

(A) i, ii (B) i, iii (C) ii, iv (D) iii only

26. An organism has 27 pairs of homologous chromosomes. In each daughter cell after completion of mitosis and in each gamete after completion of meiosis II, _____ and _____ chromosomes would be present respectively.

(A) 27 and 27 (B) 54 and 27 (C) 108 and 54 (D) 54 and108

27. A group of students was studying development of an organism under controlled laboratory conditions. Following observations were made by them.

i. The larvae had a rod-like supporting structure that separated the nervous system and the gut.

ii. A prominent central cavity was present in the transverse section of the part of the nervous system of the larvae; while the adults had cerebral ganglia as the main component of the nervous system.

iii. The eyes were prominently seen in larvae.

iv. The tails were absent in the adults, which the larvae had.

v. A lot of phagocytic activity was observed before conversion of larvae into adults.

vi. The adults had a cuticular exoskeleton.

The organism under study must be belonging to:

(A) Amphibia (B) Pisces (C) Protochordata (D) Arthropoda

28. A process is represented in the adjacent figure. The arrows indicate the flow of a biochemical reaction. The arrowhead points to the product, while the base of the arrow indicates the template biomolecule. What do P, Q, R, and S represent?

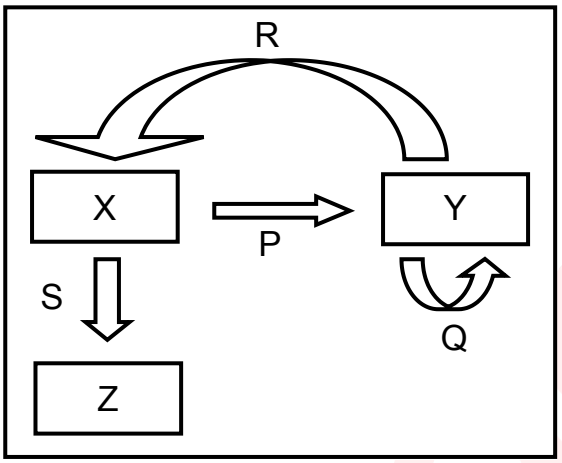

(A) P : Replication, Q : Translation, R : Transcription, S : Reverse Transcription

(B) P : Transcription, Q : Replication, R : Reverse Transcription, S : Translation

(C) P : Reverse Transcription, Q : Replication, R : Translation, S : Transcription

(D) P : Reverse Transcription, Q : Replication, R : Transcription, S : Translation

29. The whooping cranes were on the verge of extinction with only 21 individuals in wild in 1941. After conservation measures, the cranes are now included in the endangered category by IUCN. The highlight of the conservation efforts is the reintroduction of the whooping cranes in wild. This was possible due to raising of the young cranes in absence of their parents by biologists dressed in crane costumes. Aircraft Guided bird migration technique was used for teaching the captive-bred cranes to follow the scientists to learn the migratory route. What type of animal behaviour might be responsible for these captive-bred cranes to follow the crane costume dressed scientists?

(A) Cognitive learning (B) Habituation

(C) Operant conditioning (D) Genetic Imprinting

30. In the baking industry, when the dough is prepared, various ingredients are mixed together with the flour. At one instance, the dough was fermented, but failed to rise sufficiently during the baking process. Choose the correct cause(s) from following possibilities.

i. The salt was mixed before the fermentation process was completed

ii. The sugar was added in excess

iii. Yeast granules were not activated prior to mixing with the flour.

(A) i, iii (B) iii only (C) i, ii, iii (D) i, ii

31. Given below are four statements.

I. Prokaryotic cells are unicellular while eukaryotes are multicellular.

II. Histones are present in eukaryotes and absent in prokaryotes.

III. The nucleoid contains the genetic material in prokaryotes and eukaryotes.

IV. Prokaryotic flagellum is composed of flagellin while eukaryotic flagellum is composed of tubulin.

Identify which amongst these are false.

(A) I and II (B) III and IV (C) II and III (D) I and III

32. The students of a college were working on regeneration using *Planaria* (Platyhelminthes) and *Asterias* (Echinodermata). *Planaria* was cut in three pieces, namely, a piece with head, with tail and the middle piece. *Asterias* (bearing five arms) was cut in such a way that after separation, six pieces were obtained, namely, an arm with a portion of the central disc, four pieces cut from tips of each of the remaining arms and the remaining body. The animals were allowed to regenerate completely. How many *Planaria* and *Asterias* respectively will be obtained after the completion of regeneration in both?

(A) 1, 1 (B) 3, 2 (C) 3, 6 (D) 1, 2

33. Fecundity in animal world is the maximum possible ability of an individual to produce offsprings during its entire lifetime. Following factors were checked for their effect on fecundity of different animal models.

i. Availability of food during breeding season

ii. Mode of fertilization

iii. Population density

Which of these factor(s) can regulate fecundity?

(A) i, ii (B) ii, iii

(C) i, ii, iii (D) None of the above

34. Rahul sprayed a chemical 'X' on a plant with rosette habit. After few days, he found the internodal distances to have increased suddenly. The chemical 'X' might be:

(A) Ethylene (B) Abscisic acid (C) Auxin (D) Gibberellic acid

35. In case of peppered moths, pale and dark moths are observed. Pale variety is known to be the wild type variety. During industrial revolution, industrial melanism led to prevalence of dark variety around the cities and pale variety continued to be in majority in areas away from the industries. After enforcement of regulations for controlling pollution, reappearance of pale moths in majority was observed around cities again. Driving force(s) for these adaptive changes is/are:

i. Increased pollution around industries

ii. A stable transposition of a gene in moths

iii. Limitations of the vision of birds to differentiate dark moths on darkened barks and pale moths in presence of lichens

iv. Ability of lichens to grow on barks in less polluted areas only.

(A) i, iv (B) i, iii, iv

(C) i, ii (D) i, ii, iii and iv

36. Any damage or injury to a particular area causes nociceptors to release some chemicals, which carry the signal to the higher centres in the nervous system for the processing and a subsequent action. However, there is a difference in the way in which the stimulus is received which is related to the acuity of the detection. Fingertips are more sensitive as compared to the forearm. Following reasons for the observed phenomenon were suggested.

i. The receptive fields in the fingertip are smaller

ii. The number of nociceptors per receptive field in the forearm is lesser

iii. The amount of prostaglandins released by the nociceptors per receptive field is more in fingertips

The most probable reason(s) for this may be:

(A) i (B) i, iii (C) ii, iii (D) i, ii, iii

37. On a study tour, plants with leathery leaves with thick cuticle, vivipary, salt glands, apogeotropic roots, and stomata limited to abaxial surface were observed. The plants might be:

(A) Bromeliads (B) Cycads

(C) Mangroves (D) None of the above

38. Rate of photosynthesis in hydrophytes depends on various parameters. The adjacent graph shows the effect of one parameter (while keeping all the others constant) on the rate of photosynthesis. Rate of photosynthesis is plotted on Y axis. Identify the parameter which is plotted along X axis:



(A) light intensity (B) wavelength

(C) temperature (D) CO_2 concentration

39. A 4 µm long bacterial cell was magnified and drawn to a dimension of 6 cm. How many times has it been magnified?

(A) 1.5×10^3 (B) 15×10^4 (C) 1.5×10^4 (D) 1.5

40. Four different human body fluid samples were subjected to quantification of hydrogen ion concentration. mEq/L is the unit of measurement for hydrogen ion concentration. The results of the experiment were as follows:

Sample A: 1.6×10^{2} units

Sample B: 4.5×10^{-5} units

Sample C: 1×10^{-3} units

Sample D: 3×10^{-2} units

Identify the samples in sequence from A to D.

(A) Gastric HCl, Venous blood, Intracellular Fluid, Urine

(B) Venous blood, Intracellular Fluid, Gastric HCl, Urine

(C) Urine, Gastric HCl, Venous blood, Intracellular Fluid

(D) Intracellular Fluid, Urine, Gastric HCl, Venous blood

41. Four gram of mixture of calcium carbonate and sand is treated with excess of HCl and 0.880 g of carbon-di-oxide is produced. What is the percentage of calcium carbonate in original mixture?

(A) 40 % (B) 50% (C) 55% (D) 45%

42. How many sigma bonds are present between any two carbon atoms in fullerenes?

(A) 1 (B) 2 (C) 3 (D) 4

43. Gammaxene insecticide powder is prepared by the reaction given in the adjacent box. If 78 g of benzene when reacted with 106.5 g of chlorine, how much Gammaxene would be formed?

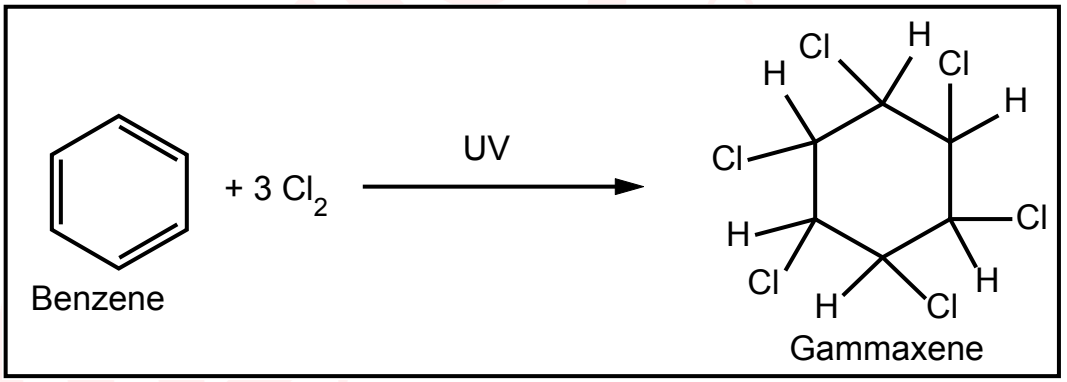

(A) 140 g (B) 154.5 g (C) 145.5 g (D) 160 g

44. An element Y is a white translucent solid at room temperature and exhibits various allotropic forms. Some compounds of element Y find application in agricultural industry. Y forms two solid oxides which dissolve in water to form comparatively weak acids. The element Y is:

(A) Sulphur (B) Nitrogen (C) Phosphorous (D) Carbon

45. A student was studying reactions of metals with dilute NaOH at room temperature. The student took dilute NaOH in four different test tubes and added copper powder to test tube A, zinc dust to test tube B, aluminium powder to test tube C and iron powder to test tube D and observed effervescence in__.

(A) Test tubes A & B (B) Test tubes B & C (C) Test tubes C & D (D) Test tubes A & D

46. Which of the following polymeric material will be ideal for remoulding?

(A) Polythene and Melamine
(B) Polyvinyl chloride and Polythene
(C) Melamine and Bakelite
(D) Bakelite and Polyvinyl chloride

47. A magician performed following act: He dipped Rs. 50 note in a 50% solution of alcohol in water and held it on the burning flame, but the note did not burn. The reason behind this is -

(A) The alcohol kept on dousing the fire
(B) Air required for burning was not available
(C) The Rs 50 note failed to reach ignition temperature
(D) The Rs. 50 note is fire proof

48. Which of the following is iso-structural with CO_2?

(A) NO_2 (B) N_2O_4 (C) NO (D) N_2O

49. Substance X is white crystalline solid which melts after 10 seconds on burner flame. It is soluble in water and insoluble in CCl_4. It is a poor conductor of electricity in molten state as well as in the form of aqueous solution, hence we conclude that substance X is

(A) an ionic compound
(B) a non polar covalent compound
(C) a polar covalent compound
(D) a pure element

50. In a beaker 50 ml of a normal HCl solution was taken and NH_3 gas was passed through it for some time. The contents of the beaker were then titrated, which required 60 ml of semi normal NaOH solution. How much ammonia was passed through the beaker?

(A) 0.85 g (B) 0.34 g (C) 0.51 g (D) 0.4 g

51. Which is the correct order of metals with reference to their melting point in increasing order?

(A) Hg, Ga, Li, Ca (B) Ca, Li, Ga, Hg (C) Hg, Li, Ga, Ca (D) Hg, Ga, Ca, Li

52. Sodium tungstate has formula Na_2WO_4, lead phosphate has formula $Pb_3(PO_4)_2$, formula for lead tungstate should be:

(A) $PbWO_4$ (B) $Pb_2(WO_4)_3$ (C) $Pb_3(WO_4)_2$ (D) $Pb_3(WO_4)_4$

53. What is the ratio of reducing agent to oxidizing agent, if the following reaction is correctly balanced?
$NH_3 + O_2 \rightarrow NO + H_2O$

(A) 4:5 (B) 5:4 (C) 5:3 (D) 3:5

54. Arrange following solutions in increasing hydronium ion concentration. The solutions are:

(P) 0.1 M HCl
(Q) 0.1 M H_2SO4
(R) 0.001 M NH_4OH
(S) 0.001 M $Ca(OH)_2$.

The correct order will be

(A) P > Q > R > S (B) Q > P > S > R (C) S > R > Q > P (D) S > R > P > Q

55. In one litre of pure water, 44.4 g of calcium chloride is dissolved. The number of ions in one mL of the resultant solution is:

(A) 7.23×10^{23} (B) 7.23×10^{20} (C) 4.82×10^{23} (D) 4.82×10^{20}

56. A zinc rod was dipped in 100 cm^3 of 1M copper chloride solution. After certain time the molarity of Cu^{2+} ions in the solution was found to be 0.8 M. If the weight of zinc rod is 20 g, then the molarity of chloride ions is_____.

(A) 2 M (B) 1.5 M (C) 1 M (D) 0.5 M

57. When four dilute solutions of (I) vinegar, (II) common salt, (III) caustic soda and (IV) baking soda are tested with universal indicator which will be the correct observation

(A) I- Green, II - Violet, III - Blue, IV - Red

(B) I - Green, II - Blue, III -Violet, IV- Red

(C) I - Red, II - Green, III - Violet, IV - Blue

(D) I-Red, II- Violet, III - Green, IV – Blue

58. Which of the following species is / are isoelectronic with Neon?

(i) N^{3-}

(ii) Mg^{2+}

(iii) K^{+}

(iv) Ca^{2+}

(A) only (iv) (B) only (ii) (C) both (i) & (ii) (D) both (i) & (iii)

59. Which of the following gases will have equal volume at STP, if the weight of gases is 14.0 g?

(i) N_2O

(ii) NO_2

(iii) N_2

(iv) CO

(A) (i) & (ii) (B) (ii) & (iii) (C) (i) & (iii) (D) (iii) & (iv)

60. Which of the following are not ionic?

(i) $AlCl_3$

(ii) $CaCl_2$

(iii) $MgCl_2$

(iv) LiCl

(A) (i) and (iv) (B) (i) and (ii) (C) (ii) and (iii) (D) (iii) and (iv)

61. Apples dropping from apple trees were observed by many people before Newton. But why they fall, was explained by Isaac Newton postulating the law of universal gravitation. Which of the following statements best describes the situation?

(A) The force of gravity acts only on the apple

(B) The apple is attracted towards the surface of the earth

(C) Both earth and apple experience the same force of attraction towards each other

(D) Apple falls due to earth's gravity and hence only (A) is true and (C) is absurd

62. A rectangular metal plate, shown in the adjacent figure has a charge of 420 μC assumed to be uniformly distributed over it. Then how much is the charge over the shaded area? No part of metal plate is cut. (Circles and the diagonal are shown for clarity only. π = 22/7)

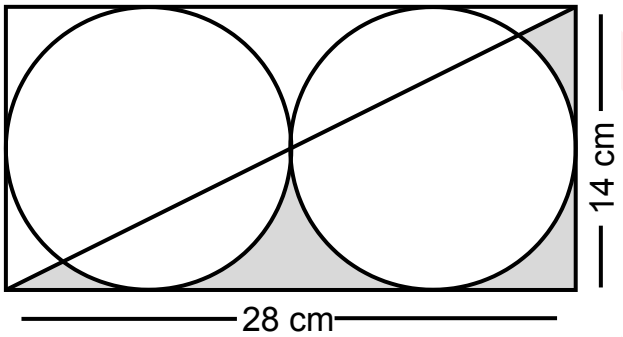

(A) 45 μC (B) 450 μC (C) 15 μC (D) 150 μC

63. In the adjacent circuit, the voltages across AD, BD and CD are 2 V, 6 V and 8 V respectively. If resistance R_A = 1 kΩ, then the values of resistances R_B and R_C are _____ and ____ respectively.

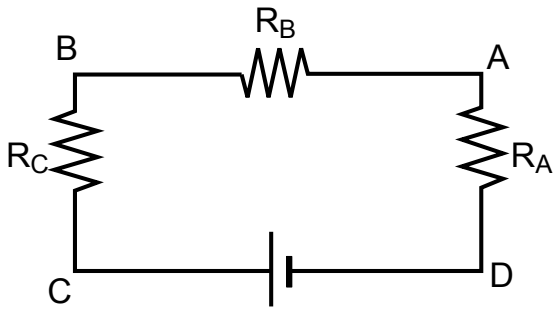

(A) 4 kΩ and 6 kΩ

(B) 2 kΩ and 1 kΩ

(C) 1 kΩ and 2 kΩ

(D) data insufficient as battery voltage is not given

64. A new linear scale of temperature measurement is to be designed. It is called a 'Z scale' on which the freezing and boiling points of water are 20 Z and 220 Z respectively. What will be the temperature shown on the 'Z scale' corresponding to a temperature of 20° C on the Celsius scale?

(A) 10 Z (B) 20 Z (C) 40 Z (D) 60 Z

65. Consider the motion of a small spherical steel body of mass m, falling freely through a long column of a fluid that opposes its motion with a force proportional to its speed. Initially the body moves down fast, but after some time attains a constant velocity known as terminal velocity. If weight mg, opposing force (F_v) and buoyant force (F_b) act on the body, then the correct equation relating these forces, after the terminal velocity is reached, is:

(A) $mg + F_v = F_b$ (B) $mg = F_v - F_b$ (C) $mg = F_v + F_b$ (D) none

66. A piece of wire P and three identical cells are connected in series. An amount of heat is generated in a certain time interval in the wire due to passage of current. Now the circuit is modified by replacing P with another wire Q and N identical cells, all connected in series. Q is four times longer in length than P. The wire P and Q are of same material and have the same diameter. If the heat generated in second situation is also same as before in the same time interval, then find N.

(A) 4 (B) 6 (C) 16 (D) 36

67. Some waveforms among I, II, III and IV superpose (add graphically) to produce the waveforms P, Q, R and S. Among the following, match the pairs that give the correct combinations:

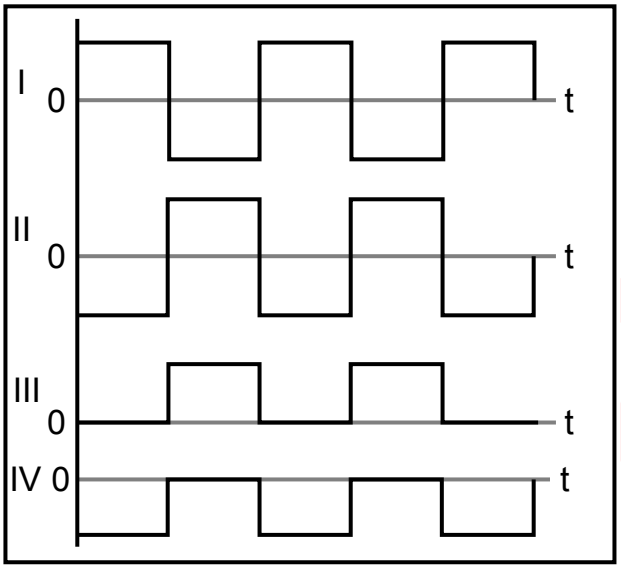

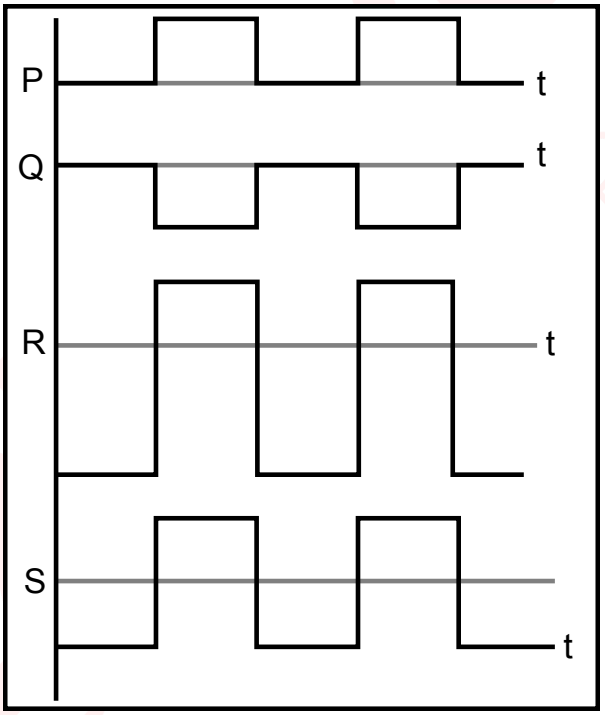

Resultant	Superposition of
P	(K) III and IV
Q	(L) II and IV
R	(M) I, II and III
S	(N) I and IV
	(O) II and III

(A) P ↔ O, Q ↔ N, R ↔ L, S ↔ M

(B) P ↔ M, Q ↔ N, R ↔ L, S ↔ K

(C) P ↔ M, Q ↔ N, R ↔ K, S ↔ L

(D) P ↔ O, Q ↔ M, R ↔ L, S ↔ K

68. At any instant of time, the total energy (E) of a simple pendulum is equal to the sum of its kinetic energy $\left(\frac{1}{2}mv^2\right)$ and potential energy $\left(\frac{1}{2}kx^2\right)$, where, m is the mass, v is the velocity, x is the displacement of the bob and k is a constant for the pendulum. The amplitude of oscillation of the pendulum is 10 cm and its total energy is 4 mJ. Find k.

(A) 1.8 Nm^{-1}

(B) 0.8 Nm^{-1}

(C) 0.5 Nm^{-1}

(D) data insufficient

69. A rigid body of mass m is suspended from point O using an inextensible string of length L. When it is displaced through an angle θ, what is the change in the potential energy of the mass? (Refer adjacent figure.)

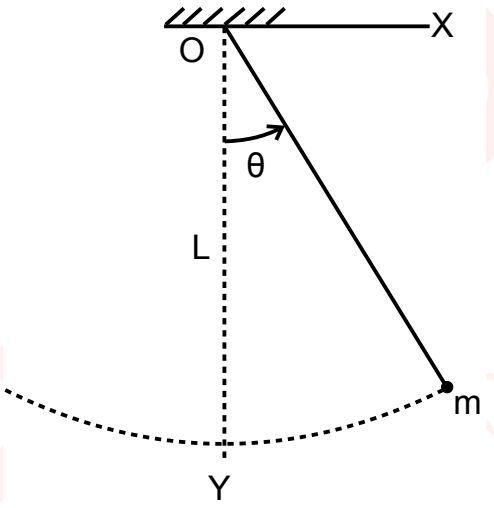

(A) mg L (1 – cos θ)

(B) mg L (cos θ – 1)

(C) mg L cos θ

(D) mg L (1 – sin θ)

70. Refer to the adjacent figure. A variable force F is applied to a body of mass 6 kg at rest. The body moves along x - axis as shown. The speed of the body at x = 5 m and x = 6 m is ___ and ___ respectively.

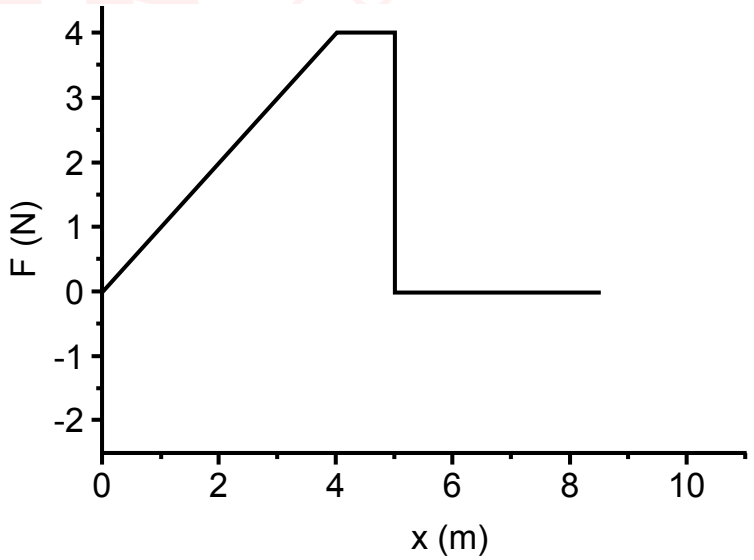

(A) 0 m/s, 0 m/s

(B) 0 m/s, 2 m/s

(C) 2 m/s, 2 m/s

(D) 2 m/s, 4 m/s

71. When a charged particle with charge q and mass m enters uniform magnetic field B with velocity v at right angles to B, the force on the moving particle is given by qvB. This force acts as the centripetal force making the charged particle go in a uniform circular motion with radius $r = \frac{mv}{Bq}$. Now if a hydrogen ion and a deuterium ion enter the magnetic field with velocities in the ratio 2:1 respectively, then the ratio of their radii will be_____.

(A) 1:2 (B) 2:1 (C) 1:4 (D) 1:1

72. A piece of ice is floating in water at 4° C in a beaker. When the ice melts completely, the water level in the beaker will

(A) rise (B) fall

(C) remains unchanged (D) unpredictable

73. In a screw-nut assembly (shown below) the nut is held fixed in its position and the screw is allowed to rotate inside it. A convex lens (L) of focal length 6.0 cm is fixed on the nut. An object pin (P) is attached to the screw head. The image of the object is observed on a screen Y. When the screw head is rotated through one rotation, the linear distance moved by the screw tip is 1.0 mm. The observations are made only when the image is obtained in the same orientation on the screen. At a certain position of P, the image formed is three times magnified as that of the pin height. Through how many turns should the screw head be rotated so that the image is two times magnified?

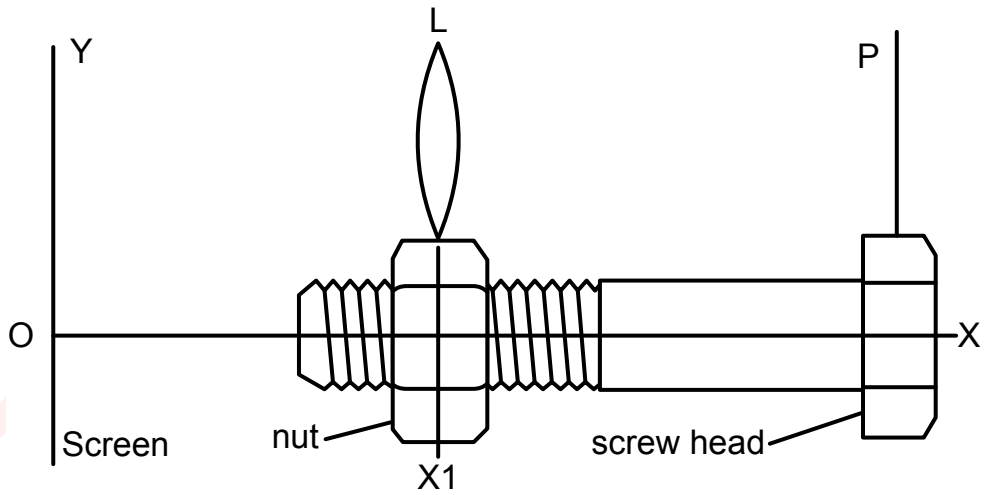

(A) 8 (B) 10 (C) 12 (D) 14

74. A school is located between two cliffs. When the metal bell is struck by school attendant, first echo is heard by him after 2.4 s and second echo follows after 2.0 s for him at the same position near the bell. If the velocity of sound in air is 340 ms^{-1} at the temperature of the surroundings, then the distance between the cliffs is approximately____.

(A) 0.488 km (B) 0.751 km (C) 1.16 km (D) 1.41 km

75. The triangular face of a crown glass prism ABC is isosceles. Length AB = length AC and the rectangular face with edge AC is silvered. A ray of light is incident normally on rectangular face with edge AB. It undergoes reflections at AC and AB internally and it emerges normally through the rectangular base with edge BC. Then angle BAC of the prism is____.

(A) 24° (B) 30° (C) 36° (D) 42°

76. The radius of curvature of a convex mirror is 'x'. The distance of an object from focus of this mirror is 'y'. Then what is the distance of image from the focus?

(A) $y^2 / 4x$ (B) x^2 / y (C) $x^2 / 4y$ (D) $4y^2 / x$

77. A physics teacher and his family are travelling in a car on a highway during a severe lightning storm. Choose the correct option:

(A) Safest place will be inside the car as the charges due to lightning tend to remain on the metal sheet / skin of the vehicle if struck by lightning.

(B) It's too dangerous to be inside the car. As the car has a metal body the charges tend to accumulate on the surface and will generate a strong electric field inside the car.

(C) Safest place is under a tree. It's better to get drenched under a tree as the wet tree will provide a path to the charges for earthing.

(D) It is safer to exit the car and stand on open ground

zigyan Eduvision Pvt Ltd

78. A conductor in the form of a circular loop is carrying current I. The direction of the current is as shown. Then which figure represents the correct direction of magnetic field lines on the surfaces of the planes XY and XZ. (Consider those surfaces of the XY and XZ planes which are seen in the figure.)

(A)

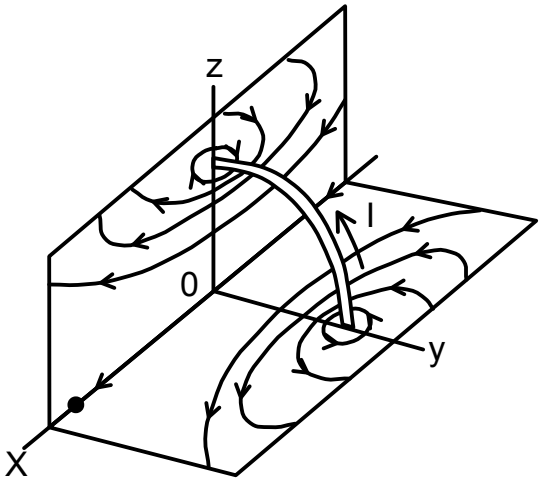

(B)

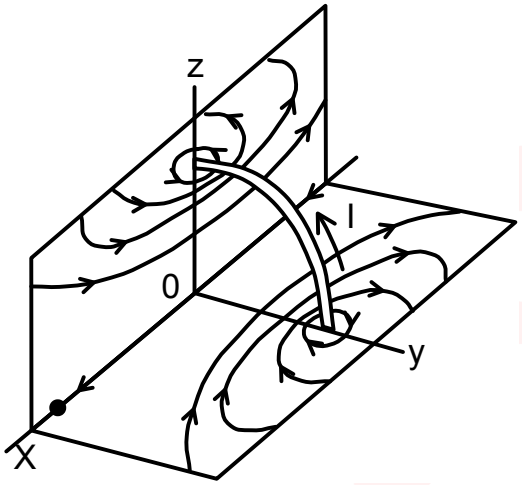

(C)

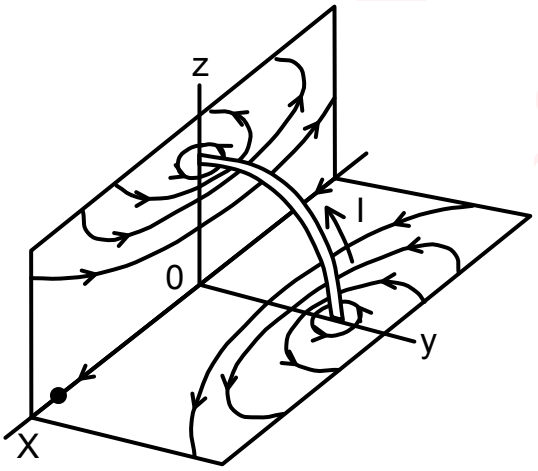

(D)

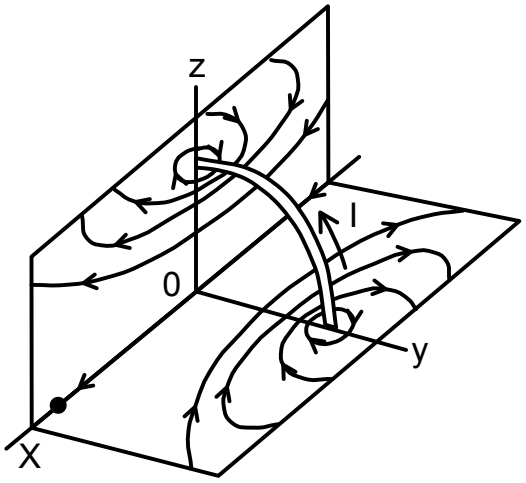

79. A particle experiences constant acceleration for 20 s after starting from rest. If it travels a distance S_1 in the first 10 s and distance S_2 in the next 10 s, the relation between S_1 and S_2 is:

(A) $S_2 = 3S_1$ (B) $S_1 = 3S_2$ (C) $S_2 = 2S_1$ (D) $S_1 = 10S_2$

80. A sound wave is produced by a vibrating metallic string stretched between its ends. Four statements are given below. Some of them are correct.

(P) Sound wave is produced inside the string.

(Q) Sound wave in the string is transverse.

(R) Wavelength of the sound wave in surrounding air is equal to the wavelength of the transverse wave on the string.

(S) Loudness of sound is proportional to the square of the amplitude of the vibrating string.

Choose the correct option.

(A) P (B) R and S (C) P and Q (D) S

Given in the question paper

NOTE: FOLLOWING INFORMATION MAY BE USEFUL TO YOU:

1. Trigonometric ratios are defined for angles greater than 90° also.

2. The following identities may be useful:

$$\sin(180^\circ - \theta) = \sin\theta; \quad \cos(180^\circ - \theta) = -\cos\theta$$

3. Periodic Table of elements

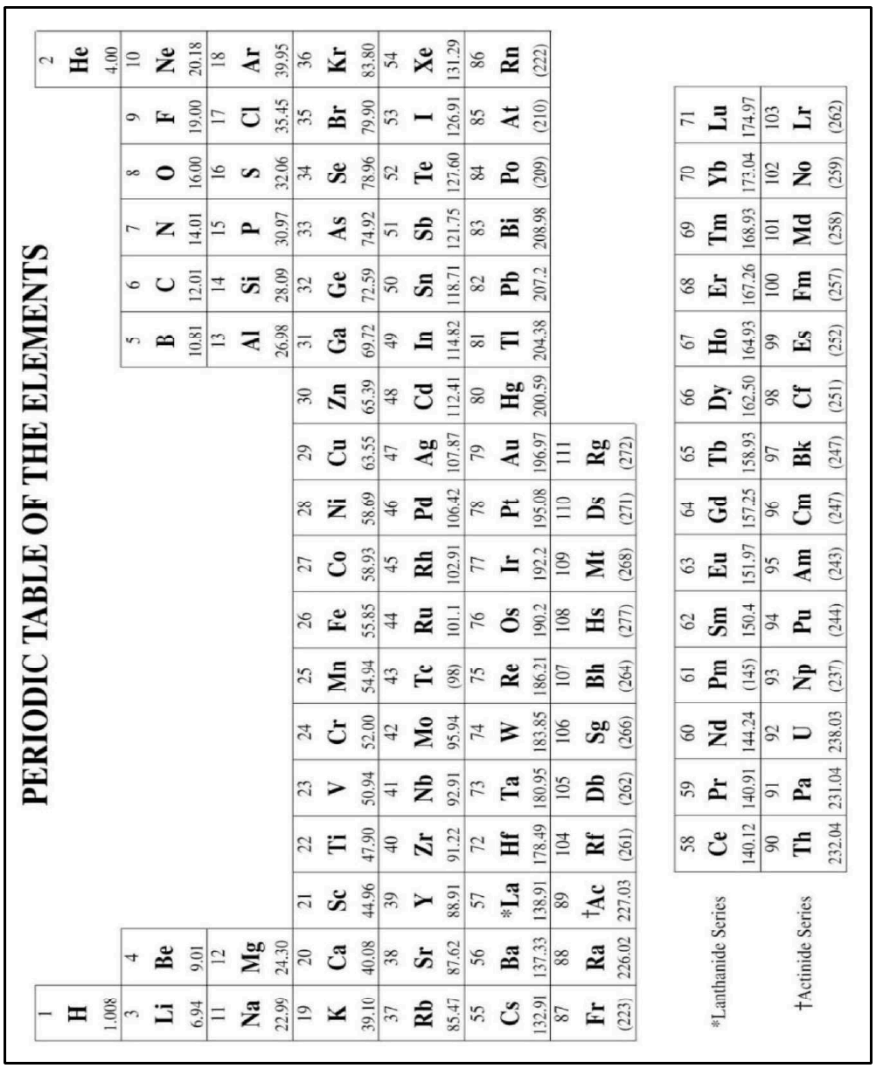

PERIODIC TABLE OF THE ELEMENTS

1																	2
H																	He
1.008																	4.00
3	4											5	6	7	8	9	10
Li	Be											B	C	N	O	F	Ne
6.94	9.01											10.81	12.01	14.01	16.00	19.00	20.18
11	12											13	14	15	16	17	18
Na	Mg											Al	Si	P	S	Cl	Ar
22.99	24.30											26.98	28.09	30.97	32.06	35.45	39.95
19	20	21	22	23	24	25	26	27	28	29	30	31	32	33	34	35	36
K	Ca	Sc	Ti	V	Cr	Mn	Fe	Co	Ni	Cu	Zn	Ga	Ge	As	Se	Br	Kr
39.10	40.08	44.96	47.90	50.94	52.00	54.94	55.85	58.93	58.69	63.55	65.39	69.72	72.59	74.92	78.96	79.90	83.80
37	38	39	40	41	42	43	44	45	46	47	48	49	50	51	52	53	54
Rb	Sr	Y	Zr	Nb	Mo	Tc	Ru	Rh	Pd	Ag	Cd	In	Sn	Sb	Te	I	Xe
85.47	87.62	88.91	91.22	92.91	95.94	(98)	101.1	102.91	106.42	107.87	112.41	114.82	118.71	121.75	127.60	126.91	131.29
55	56	57	72	73	74	75	76	77	78	79	80	81	82	83	84	85	86
Cs	Ba	*La	Hf	Ta	W	Re	Os	Ir	Pt	Au	Hg	Tl	Pb	Bi	Po	At	Rn
132.91	137.33	138.91	178.49	180.95	183.85	186.21	190.2	192.2	195.08	196.97	200.59	204.38	207.2	208.98	(209)	(210)	(222)
87	88	89	104	105	106	107	108	109	110	111							
Fr	Ra	†Ac	Rf	Db	Sg	Bh	Hs	Mt	Ds	Rg							
(223)	226.02	227.03	(261)	(262)	(266)	(264)	(277)	(268)	(271)	(272)							

*Lanthanide Series	58	59	60	61	62	63	64	65	66	67	68	69	70	71
	Ce	Pr	Nd	Pm	Sm	Eu	Gd	Tb	Dy	Ho	Er	Tm	Yb	Lu
	140.12	140.91	144.24	(145)	150.4	151.97	157.25	158.93	162.50	164.93	167.26	168.93	173.04	174.97
†Actinide Series	90	91	92	93	94	95	96	97	98	99	100	101	102	103
	Th	Pa	U	Np	Pu	Am	Cm	Bk	Cf	Es	Fm	Md	No	Lr
	232.04	231.04	238.03	(237)	(244)	(243)	(247)	(247)	(251)	(252)	(257)	(258)	(259)	(262)

ANSWER KEY

NSEJS 2019 · PAPER CODE 51

80
QUESTIONS · 240 MARKS

IAPT final answer key for paper code 51. ★ marks an answer given as per Zigyan.

1	(D)	2	(B)	3	(C)	4	(C)	5	(D)
6	(A)	7	(D)	8	(D)	9	(A)	10	(B)
11	(A)	12	(A)	13	(A)	14	(A)	15	(A)
16	(C)	17	(A)	18	(D)	19	(C)	20	(B)
21	(C)	22	(B)★	23	(B)	24	(D)	25	(A)★
26	(B)	27	(C)	28	(D)	29	(D)	30	(C)
31	(D)	32	(B)	33	(C)	34	(D)	35	(B)★
36	(A)★	37	(C)	38	(B)	39	(C)	40	(A)
41	(B)	42	(A)	43	(C)	44	(C)	45	(B)
46	(B)	47	(C)	48	(D)	49	(C)	50	(B)
51	(A)	52	(A)	53	(A)	54	–★	55	(B)
56	(A)	57	(C)	58	(C)	59	(D)	60	(A)★
61	(C)	62	(A)	63	(B)	64	(D)	65	(C)
66	(B)	67	(B)	68	(B)	69	(A)	70	(C)
71	(D)	72	(A)	73	(B)	74	(C)	75	(C)
76	(C)	77	(A)	78	(A)	79	(A)	80	(D)

★ Answers as per Zigyan

- **Q22** — As per Zigyan: (B); IAPT key (B).
- **Q25** — As per Zigyan: (A); IAPT key (B).
- **Q35** — As per Zigyan: (B); IAPT key (B) or (D).
- **Q36** — As per Zigyan: (A); IAPT key (D).
- **Q54** — As per Zigyan: no option is correct; dropped by IAPT.
- **Q60** — As per Zigyan: (A); IAPT key (A).

zigyan

OLYMPIADS · 2026

Olympiad results



TOP ACHIEVEMENT · CHEMISTRY

Qualified the Chemistry Olympiad twice, and selected for the HBCSE camp.

Saksham Bishnoi reached the national stage of the Chemistry Olympiad in two consecutive years and was selected for the Orientation-cum-Selection Camp at HBCSE, Mumbai. 4 Years Classroom - the same student who took AIR 168 in JEE Advanced 2026.

Qualified twice | HBCSE selection camp | Only student from Faridabad

Above MAS means above the **Minimum Admissible Score**: clearing it puts a student in the national band for their subject. It is a real threshold, not a participation marker.

CHEMISTRY · ABOVE MAS



Sulokya Bibhuty
Class XII
3 Years Classroom
Above MAS



Anay Gupta
Class XI
3 Years Classroom
Above MAS



Akshat Khator
Class XI
3 Years Classroom
Above MAS



Harshit Goyal
Class XII
4 Years Classroom
Above MAS



Hardik Sharma
Class XI
3 Years Classroom
Above MAS



Aarush Kumar
Class XII
1 Year Classroom
Above MAS

PHYSICS · ASTRONOMY · MATHEMATICS

PHYSICS



Sulokya Bibhuty
Class XII
3 Years Classroom
Above MAS

PHYSICS



Saksham Bishnoi
Class XII
4 Years Classroom
Above MAS

ASTRONOMY



Sulokya Bibhuty
Class XI
3 Years Classroom
Above MAS

MATHEMATICS · IOQM



Priyanshi
Class XI
4 Years Classroom
IOQM Qualifier

OLYMPIADS WE PREPARE STUDENTS FOR

NSEP	NSEC	NSEB	NSEA	IOQM	NSEJS
Physics	Chemistry	Biology	Astronomy	Mathematics	Class X and below

The olympiad pathway starts in Class 8.

NSEJS is open to Class 10 and below - the habit of staying with one hard problem is the one JEE Advanced rewards.

Zigyan Eduvision Pvt. Ltd. · SCO No. 107, Sector 16, Faridabad 121002
0129-4048800 · +91 92115 38800 · info@zigyan.com

zigyan

RESULTS · 2021 – 2026

Our toppers, year by year

40
JEE Advanced selections in 6 years

AIR 168
best rank — Saksham Bishnoi, 2026

16 of 35
students selected, JEE Advanced 2026

14 of 35
above 98 percentile, JEE Main 2026

JEE ADVANCED SELECTIONS PER YEAR

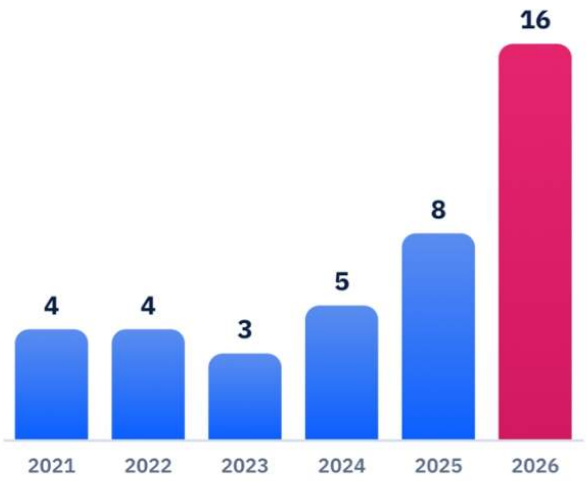

BEST RANK EACH YEAR

YEAR	JEE ADVANCED	JEE MAIN
2026	**Saksham Bishnoi** AIR 168 · 4 Years Classroom	**Saksham Bishnoi** AIR 811 · 99.95 %ile
2025	**Chakshu** AIR 4,233 · 2 Years Classroom	**Chakshu** AIR 8,538 · 99.44 %ile
2024	**Harshit** AIR 777 · 2 Years Classroom	**Harshit** AIR 1,473 · 99.91 %ile
2023	**Aditya Jain** AIR 2,373 · 2 Years Classroom	**Aditya Jain** AIR 2,503 · 99.79 %ile
2022	**Rachit Sharma** AIR 698 · 1 Year Classroom	**Rachit Sharma** AIR 1,016 · 99.90 %ile
2021	**Sparsh Mittal** AIR 2,237 · 1 Year Classroom	**Sparsh Mittal** AIR 1,562

JEE ADVANCED 2026 — THIRTEEN NAMED SELECTIONS



Saksham Bishnoi
AIR 168
4 Years Classroom



Sulokya Bibhuty
AIR 1,315
3 Years Classroom



Aarush
AIR 2,699
1 Year Classroom



Manishka
AIR 2,869
4 Years Classroom



Oojit Kumar
AIR 5,765
4 Years Classroom



Harshit Goyal
AIR 6,407
4 Years Classroom



Pranab Sharma
AIR 6,750
3 Years Classroom



Aditya Dhar
AIR 15,183
3 Years Classroom



Arpit Anshuman
AIR 19,308
4 Years Classroom



Lokesh
AIR 22,857
3 Years Classroom



Arjun
AIR 24,674
3 Years Classroom



Sanyam Gulyani
AIR 25,123
1 Year Classroom



Saket
AIR 27,628
3 Years Classroom

Sixteen students of the 2026 batch were selected in JEE Advanced; the thirteen above are named with their All India Rank.

JEE MAIN 2026 — TOP SIX, WITH PERCENTILE



Saksham Bishnoi
AIR 811
99.95 %ile
4 Years Classroom



Sulokya Bibhuty
AIR 1,095
99.94 %ile
3 Years Classroom



Harshit Goyal
AIR 2,662
99.83 %ile
4 Years Classroom



Manishka
AIR 4,817
99.70 %ile
4 Years Classroom



Oojit Kumar
AIR 5,040
99.69 %ile
4 Years Classroom



Aarush
AIR 5,276
99.67 %ile
1 Year Classroom

14 of the 35 students in the 2026 batch scored above the 98th percentile in JEE Main.

Zigyan Eduvision Pvt. Ltd. · SCO No. 107, Sector 16, Faridabad 121002
0129-4048800 · +91 92115 38800 · info@zigyan.com