zigyan

PREVIOUS YEAR PAPER · 2019

OLYMPIAD · STAGE I

NSEJS

National Standard Examination in Junior Science

2019

Question paper, answer key and Zigyan solutions

80	240	120 min	51
Questions	Maximum marks	Time	Paper code

Question paper and official answer key: Indian Association of Physics Teachers (IAPT), NSEJS 2019, paper code 51.
Solutions and notes: Zigyan. This booklet is not an IAPT publication.

Prepare for the Olympiads with Zigyan

www.zigyan.com

zigyan

SCO No. 107, Sector 16, Faridabad, Haryana 121002
0129-4048800 · +91 92115 38800 · info@zigyan.com

zigyan

JEE 2026 RESULTS

OUR TOPPERS

When talent meets the right guidance.

Saksham Bishnoi and Sulokya Bibhuty - our JEE 2026 toppers from Zigyan, Sector 16 - with the programme they took and the rank they earned.



Rahul Kaushik Sir
Founder & Director, Zigyan Eduvision
23 years of teaching



Saksham Bishnoi

4 YEARS CLASSROOM

JEE ADVANCED 2026	JEE MAIN 2026
AIR 168	AIR 811
	99.95 percentile



Sulokya Bibhuty

3 YEARS CLASSROOM

JEE ADVANCED 2026	JEE MAIN 2026
AIR 1,315	AIR 1,095
	99.94 percentile

OLYMPIAD RESULTS

Above the Minimum Admissible Score - the national band for the subject

CHEMISTRY

- Sulokya Bibhuty — 3 Years Classroom
- Anay Gupta — 3 Years Classroom
- Akshat Khator — 3 Years Classroom
- Harshit Goyal — 4 Years Classroom
- Hardik Sharma — 3 Years Classroom
- Aarush Kumar — 1 Year Classroom

PHYSICS

- Sulokya Bibhuty — 3 Years Classroom
- Saksham Bishnoi — 4 Years Classroom

ASTRONOMY

- Sulokya Bibhuty — 3 Years Classroom

MATHEMATICS (IOQM)

- Priyanshi — 4 Years Classroom

Saksham Bishnoi qualified the Chemistry Olympiad twice and was selected for the Orientation-cum-Selection Camp at HBCSE, Mumbai.

16 selections	16 of 35	AIR 168
in JEE Advanced 2026	students of the batch selected	best JEE Advanced rank

Start where they started.

Register for ZEST - ₹200 · www.zigyan.com/scholarship/zest

+91 92115 38800
info@zigyan.com

PART A-1 · ONE CORRECT OPTION

Q. 1 – 80 · +3 for a correct answer, –1 for a wrong one

1. Let α and β be the roots of $x^2 - 5x + 3 = 0$ with $\alpha > \beta$. If $a_n = \alpha^n - \beta^n$ for $n \geq 1$ then the value of $\frac{3a_6 + a_8}{a_7}$ is

(A) 2 (B) 3 (C) 4 (D) 5

Solution · Q1 **Answer: (D)**

As α is a root of the equation,

$$\alpha^2 - 5\alpha + 3 = 0$$

$$\Rightarrow \alpha^8 - 5\alpha^7 + 3\alpha^6 = 0$$

Similarly, for the other root,

$$\beta^8 - 5\beta^7 + 3\beta^6 = 0$$

On subtracting,

$$a_8 - 5a_7 + 3a_6 = 0$$

$$\therefore \frac{3a_6 + a_8}{a_7} = 5$$

IAPT answer: (D) | **Zigyan answer:** (D)

2. The number of triples (x, y, z) such that any one of these numbers is added to the product of the other two, the result is 2, is

(A) 1 (B) 2 (C) 4 (D) infinitely many

Solution · Q2 **Answer: (B)**

$$x + yz = 2$$

$$y + zx = 2$$

$$z + xy = 2$$

Subtracting the second equation from the first:

$$(x - y)(1 - z) = 0$$

So either z is 1, or x and y are equal.

When z is 1:

$$x + y = 2 \text{ and } xy = 1$$

$$\Rightarrow x = y = 1$$

When x and y are equal:

$$x + xz = 2 \text{ and } z + x^2 = 2$$

$$\Rightarrow (x - z)(x - 1) = 0$$

If x is 1, then z is also 1. If z equals x:

$$x^2 + x - 2 = 0$$

$$\Rightarrow x = 1, -2$$

∴ Only two triples exist: (1, 1, 1) and (−2, −2, −2).

IAPT answer: (B) | **Zigyan answer:** (B)

3. In rectangle ABCD, AB=5 and BC=3. Points F and G are on the line segment CD so that DF = 1 and GC=2. Lines AF and BG intersect at E. What is the area of AEB?

(A) 10 sq. units (B) 15/2 sq. units (C) 25/2 sq. units (D) 20 sq. units

Solution · Q3 **Answer: (C)**

F and G lie on CD.

$$FG = 5 - 1 - 2 = 2$$

As FG is parallel to AB, triangles EFG and EAB are similar. Let the height of E above AB be h.

$$\frac{h-3}{h} = \frac{2}{5}$$

$$\Rightarrow h = 5$$

Area of triangle AEB, in square units:

$$= \frac{1}{2} \times 5 \times 5 = \frac{25}{2}$$

IAPT answer: (C) | **Zigyan answer:** (C)

4. In the given figure, two concentric circles are shown with centre O. PQRS is a square inscribed in the outer circle. It also circumscribes the inner circle, touching it at points B, C, D and A. What is the ratio of the perimeter of the outer circle to that of quadrilateral ABCD?

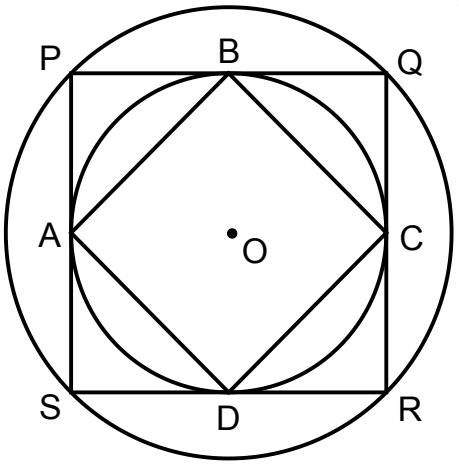

(A) $\frac{\pi}{4}$ (B) $\frac{3\pi}{2}$

(C) $\frac{\pi}{2}$ (D) π

Solution · Q4 **Answer: (C)**

Let the radius of the outer circle be R. The diagonal PR of the square is its diameter.

$$PR = 2R$$

$$\Rightarrow PQ = R\sqrt{2}$$

A, B, C and D are the mid-points of the sides of the square.

$$\Rightarrow AB = \sqrt{\left(\frac{PQ}{2}\right)^2 + \left(\frac{PQ}{2}\right)^2} = R$$

Ratio of the two perimeters:

$$\frac{2\pi R}{4R} = \frac{\pi}{2}$$

IAPT answer: (C) | **Zigyan answer:** (C)

5. How many positive integers N give a remainder 8 when 2008 is divided by N.

(A) 12 (B) 13 (C) 14 (D) 15

Solution · Q5 **Answer: (D)**

N must divide the number left after removing the remainder, and N must be greater than the remainder.

$$2008 - 8 = 2000$$

$$2000 = 2^4 \times 5^3$$

Number of divisors of 2000:

$$(4 + 1)(3 + 1) = 20$$

The divisors 1, 2, 4, 5 and 8 are not greater than 8.

$$\therefore 20 - 5 = 15$$

IAPT answer: (D) | **Zigyan answer:** (D)

6. What is the product of all the roots of the equation $\sqrt{5|x| + 8} = \sqrt{x^2 - 16}$?

(A) – 64 (B) – 24 (C) 576 (D) 24.

Solution · Q6 **Answer: (A)**

On squaring both sides,

$$5|x| + 8 = x^2 - 16$$

$$\Rightarrow |x|^2 - 5|x| - 24 = 0$$

$$\Rightarrow (|x| - 8)(|x| + 3) = 0$$

A modulus cannot be negative.

$$\Rightarrow |x| = 8$$

$$\Rightarrow x = \pm 8$$

Both values keep the expressions under the roots positive.

Product of the roots:

$$(8)(-8) = -64$$

IAPT answer: (A) | **Zigyan answer:** (A)

7. LCM of two numbers is 5775. Which of the following cannot be their HCF?

(A) 175 (B) 231 (C) 385 (D) 455

Solution · Q7 **Answer: (D)**

The HCF of two numbers must divide their LCM.

$$5775 = 3 \times 5^2 \times 7 \times 11$$

$$175 = 5^2 \times 7$$

$$231 = 3 \times 7 \times 11$$

$$385 = 5 \times 7 \times 11$$

$$455 = 5 \times 7 \times 13$$

The prime 13 is not in the LCM, so 455 cannot be the HCF.

IAPT answer: (D) | **Zigyan answer:** (D)

8. If a, b, c are distinct real numbers such that $a + \frac{1}{b} = b + \frac{1}{c} = c + \frac{1}{a}$ evaluate abc.

(A) $\pm\sqrt{2}$ (B) $\sqrt{2} - 1$

(C) $\sqrt{3}$ (D) ± 1

Solution · Q8 **Answer: (D)**

From the first two expressions,

$$a - b = \frac{1}{c} - \frac{1}{b} = \frac{b - c}{bc}$$

Similarly,

$$b - c = \frac{c - a}{ca}$$

$$c - a = \frac{a - b}{ab}$$

Multiply the three results. The numbers are distinct, so no difference is zero and the common product cancels.

$$\Rightarrow a^2b^2c^2 = 1$$

$$\Rightarrow abc = \pm 1$$

IAPT answer: (D) | **Zigyan answer:** (D)

9. If the equation $(\alpha^2 - 5\alpha + 6)x^2 + (\alpha^2 - 3\alpha + 2)x + (\alpha^2 - 4) = 0$ has more than two roots, then the value of α is

(A) 2 (B) 3 (C) 1 (D) none of these

Solution · Q9 **Answer: (A)**

A quadratic equation with more than two roots is an identity. So every coefficient is zero.

$$\alpha^2 - 5\alpha + 6 = 0$$

$$\Rightarrow \alpha = 2, 3$$

$$\alpha^2 - 3\alpha + 2 = 0$$

$$\Rightarrow \alpha = 1, 2$$

$$\alpha^2 - 4 = 0$$

$$\Rightarrow \alpha = \pm 2$$

$\therefore$ The common value is 2.

IAPT answer: (A) | **Zigyan answer:** (A)

10. Mr. X with his eight children of different ages is on a family trip. His oldest child, who is 9 years old saw a license plate with a 4-digit number in which each of two digits appear two times. "Look daddy!" she exclaims. "That number is evenly divisible by the age of each of us kids!" "That's right," replies Mr. X, "and the last two digits just happen to be my age". Which of the following is not the age of one of Mr. X's children?

(A) 4 (B) 5 (C) 6 (D) 7

Solution · Q10 **Answer: (B)**

Only one age from 1 to 8 is missing. So 4 or 8 is an age, and the number is even.

It is also divisible by 9. Let its two different digits be p and q.

So twice the sum of these digits is a multiple of 9, and the sum itself must be 9.

$$\Rightarrow p + q = 9$$

If 5 is an age, the even number ends in 0, so its digits are 9 and 0.

Then 9900 gives the father's age as 00, while 9090 is divisible by neither 4 nor 8. So 5 is not an age.

The other eight ages have LCM 504.

$$504 \times 11 = 5544$$

The father is 44 years old.

IAPT answer: (B) | **Zigyan answer:** (B)

11. How many numbers lie between 11 and 1111 which divided by 9 leave a remainder 6 and when divided by 21 leave a remainder 12?

(A) 18 (B) 28 (C) 8 (D) None of these

Solution · Q11 **Answer: (A)**

The first number leaving both remainders is 33. Such numbers repeat after the LCM of 9 and 21, which is 63.

So each required number has this form:

$63k + 33$

$$11 < 63k + 33 < 1111$$

$$\Rightarrow k = 0, 1, 2, \ldots, 17$$

$\therefore$ There are 18 such numbers.

IAPT answer: (A) | **Zigyan answer:** (A)

12. Two unbiased dice are rolled. What is the probability of getting a sum which is neither 7 nor 11?

(A) 7/9 (B) 7/18 (C) 2/9 (D) 11/18

Solution · Q12 **Answer: (A)**

Total outcomes:

$$6 \times 6 = 36$$

A sum of 7 comes in six ways: (1, 6), (2, 5), (3, 4), (4, 3), (5, 2), (6, 1).

A sum of 11 comes in two ways: (5, 6), (6, 5).

Required probability:

$$= 1 - \frac{8}{36} = \frac{7}{9}$$

IAPT answer: (A) | **Zigyan answer:** (A)

13. The solution of the equation 1 + 4 + 7 + ... + x = 925 is

(A) 73 (B) 76 (C) 70 (D) 74

Solution · Q13 **Answer: (A)**

The terms are in A.P.

$$a = 1, d = 3$$

Let x be the nth term.

$$\frac{n}{2}[2 + 3(n - 1)] = 925$$

$$\Rightarrow 3n^2 - n - 1850 = 0$$

$$\Rightarrow (n - 25)(3n + 74) = 0$$

$$\Rightarrow n = 25$$

$$\therefore x = 1 + 24 \times 3 = 73$$

IAPT answer: (A) | **Zigyan answer:** (A)

14. If $\tan\theta + \sec\theta = 1.5$, then value of $\sin\theta$ is

(A) $\frac{5}{13}$ (B) $\frac{12}{13}$

(C) $\frac{3}{5}$ (D) $\frac{2}{3}$

Solution · Q14 **Answer: (A)**

Using the identity,

$$\sec^2\theta - \tan^2\theta = 1$$

$$\Rightarrow (\sec\theta - \tan\theta)(\sec\theta + \tan\theta) = 1$$

$$\Rightarrow \sec\theta - \tan\theta = \frac{2}{3}$$

Also,

$$\sec\theta + \tan\theta = \frac{3}{2}$$

Adding and subtracting the last two,

$$\sec\theta = \frac{13}{12}$$

$$\tan\theta = \frac{5}{12}$$

$$\therefore \sin\theta = \frac{\tan\theta}{\sec\theta} = \frac{5}{13}$$

IAPT answer: (A) | **Zigyan answer:** (A)

15. An observer standing at the top of a tower, finds that the angle of elevation of a red bulb on the top of a light house of height H is α. Further, he finds that the angle of depression of reflection of the bulb in the ocean is β. Therefore, the height of the tower is

(A) $\frac{H(\tan\beta - \tan\alpha)}{(\tan\beta + \tan\alpha)}$

(B) $\frac{H\sin(\beta - \alpha)}{\cos(\alpha + \beta)}$

(C) $\frac{H(\cos\alpha - \cos\beta)}{(\cot\alpha + \cot\beta)}$

(D) H

Solution · Q15 **Answer: (A)**

Take both heights from the water level. Let h be the height of the tower and d its distance from the light house.

The image of the bulb is at depth H below the water.

For the bulb:

$$\tan\alpha = \frac{H - h}{d}$$

For its reflection:

$$\tan\beta = \frac{H + h}{d}$$

Dividing the two,

$$\frac{\tan\alpha}{\tan\beta} = \frac{H - h}{H + h}$$

$$\therefore h = \frac{H(\tan\beta - \tan\alpha)}{(\tan\beta + \tan\alpha)}$$

IAPT answer: (A) | **Zigyan answer:** (A)

16. The sum of the roots of $\frac{1}{x + a} + \frac{1}{x + b} = \frac{1}{c}$ is zero. The product of roots is

(A) 0

(B) $\frac{a + b}{2}$

(C) $-\frac{1}{2}(a^2 + b^2)$

(D) $2(a^2 + b^2)$

Solution · Q16 **Answer: (C)**

Cross-multiplying,

$$c(2x + a + b) = (x + a)(x + b)$$

$$\Rightarrow x^2 + (a + b - 2c)x + ab - bc - ca = 0$$

The sum of the roots is zero.

$$\Rightarrow c = \frac{a + b}{2}$$

For the product of the roots:

$$P = ab - c(a + b)$$

$$\Rightarrow P = ab - \frac{(a+b)^2}{2}$$

$$\therefore P = -\frac{1}{2}\left(a^2 + b^2\right)$$

IAPT answer: (C) | **Zigyan answer:** (C)

17. In the convex quadrilateral ABCD, the diagonals AC and BD meet at O and the measure of angle AOB is 30°. If the areas of triangle AOB, BOC, COD and AOD are 1, 2, 8 and 4 square units respectively, what is the product of the lengths of the diagonals AC and DB in sq. units?

(A) 60 (B) 56 (C) 54 (D) 64

Solution · Q17 **Answer: (A)**

The diagonals cross at an angle of 30°.

For quadrilateral ABCD:

$$\text{ar(ABCD)} = 1 + 2 + 8 + 4 = 15$$

In terms of the diagonals,

$$\text{ar}(\text{ABCD}) = \frac{1}{2} \times \text{AC} \times \text{BD} \times \sin 30^\circ$$

$$\Rightarrow 15 = \frac{1}{2} \times \text{AC} \times \text{BD} \times \frac{1}{2}$$

$$\therefore \text{AC} \times \text{BD} = 60$$

IAPT answer: (A) | **Zigyan answer:** (A)

18. If $\sin^2 x + \sin^2 y + \sin^2 z = 0$, then which of the following is NOT a possible value of cosx + cosy + cosz ?

(A) 3 (B) −3 (C) −1 (D) −2

Solution · Q18 **Answer: (D)**

A sum of squares is zero only when every term is zero.

$$\Rightarrow \sin x = \sin y = \sin z = 0$$

So each cosine is +1 or −1.

$$\Rightarrow \cos x + \cos y + \cos z = \pm 3 \text{ or } \pm 1$$

∴ The value −2 is not possible.

IAPT answer: (D) | **Zigyan answer:** (D)

19. Find the remainder when x^{51} is divided by $x^2 - 3x + 2$.

(A) x (B) $(2^{51} - 2)x + 2 - 2^{51}$

(C) $(2^{51} - 1)x + 2 - 2^{51}$ (D) 0

Solution · Q19 **Answer: (C)**

The divisor in factors:

$$x^2 - 3x + 2 = (x - 1)(x - 2)$$

Let the remainder be R(x).

$$R(x) = px + q$$

$$x^{51} = (x - 1)(x - 2)\,Q(x) + px + q$$

Put the two zeros of the divisor, one at a time.

$$p + q = 1$$

$$2p + q = 2^{51}$$

$$\Rightarrow p = 2^{51} - 1,\ q = 2 - 2^{51}$$

$$\therefore R(x) = (2^{51} - 1)x + 2 - 2^{51}$$

IAPT answer: (C) | **Zigyan answer:** (C)

20. In an equilateral triangle, three coins of radii 1 unit each are kept so that they touch each other and also sides of the triangle. The area of triangle ABC (in sq. units) is

(A) $4 + 2\sqrt{3}$ (B) $4\sqrt{3} + 6$

(C) $12 + \frac{7\sqrt{3}}{4}$ (D) $3 + \frac{7\sqrt{3}}{4}$

Solution · Q20 **Answer: (B)**

Each coin touches two sides and the other two coins.

The centres form an equilateral triangle of side 2 units.

Along a side, from a vertex to the nearest point of contact:

$$d = 1 \times \cot 30^\circ = \sqrt{3}$$

Side of the big triangle:

$$a = 2 + 2\sqrt{3}$$

Area of triangle ABC:

$$\text{ar}(\text{ABC}) = \frac{\sqrt{3}}{4}\left(2 + 2\sqrt{3}\right)^2$$

$$\therefore \text{ar}(\text{ABC}) = 4\sqrt{3} + 6$$

IAPT answer: (B) | **Zigyan answer:** (B)

21. Gymnosperms are called 'naked seed bearing plants' because they lack:

(A) Male gamete (B) Ovule (C) Ovary (D) Seeds

Solution · Q21 **Answer: (C)**

In gymnosperms the ovules are not enclosed by any ovary wall; they lie exposed.

With no ovary, no fruit forms around the seeds, so the seeds stay naked.

IAPT answer: (C) | **Zigyan answer:** (C)

22. In case of mice coat colour, two genes are responsible for colour of the hair. Gene 'A' is responsible for distribution of pigments on shaft of hair. Wild type allele of 'A' produces a yellow band on dark hair shaft (agouti), whereas recessive allele produces no yellow band. There is another allele of A, known as A^Y, which is embryonic lethal in homozygous condition only. In an experiment, two yellow mice were crossed to obtain a progeny of 6 pups. What would be the most probable number of agouti mice among them?

(A) 0 (B) 2

(C) 4 (D) None of the above

Solution · Q22 **As per Zigyan: (B)**

Take each yellow parent as A^YA, with one A^Y allele and one wild type allele.

$A^YA \times A^YA$

$\Rightarrow 1\ A^YA^Y : 2\ A^YA : 1\ AA$

The A^YA^Y embryos die. So the living pups are yellow and agouti in the ratio 2 : 1.

Probability that a living pup is agouti:

$$p = \frac{1}{3}$$

Most probable number of agouti mice among 6 pups:

$$6 \times \frac{1}{3} = 2$$

Reference: NCERT Biology Class XII, Chapter 4 'Principles of Inheritance and Variation', section 4.2: a cross between two heterozygotes gives the three genotypes in the ratio 1:2:1.

Reference: OpenStax Biology 2e, section 12.2 'Characteristics and Traits', Lethality: when homozygotes for a lethal allele die before birth, only heterozygotes and normal homozygotes are seen, and the genotype ratio is 2:1.

IAPT answer: (B) | **Zigyan answer:** (B)

23. A stain was developed by a group of scientists to stain a particular cell organelle. The stain was tested on various tissues derived from an autopsy sample from a mammal. The organelles were counted. The results showed maximum number of the organelles in cells of brain, lesser in cells of heart, least in mature sperms and absent in erythrocytes. Identify the organelles from following options.

(A) Nissl bodies (B) Mitochondria

(C) Golgi bodies (D) Endoplasmic reticulum

Solution · Q23 **Answer: (B)**

Mature mammalian erythrocytes have no mitochondria.

Mature sperms keep mitochondria only in the middle piece, to power the tail.

Nissl bodies occur only in nerve cells, and mature sperms have no Golgi bodies or endoplasmic reticulum.

∴ The stained organelles are mitochondria.

IAPT answer: (B) | **Zigyan answer:** (B)

24. *Pinus sylvestris* grows at low temperatures in Russia. The plant survives under such freezing conditions due to the presence of:

(A) Saturated lipids in plasma membrane

(B) Glycoproteins in plasma membrane

(C) Glycolipids in plasma membrane

(D) Polyunsaturated lipids in plasma membrane

Solution · Q24 **Answer: (D)**

In severe cold, membrane lipids tend to pack closely and the membrane turns stiff.

Polyunsaturated fatty acid tails have several double bonds. The bends in these tails prevent close packing.

∴ The plasma membrane stays fluid and the plant survives.

IAPT answer: (D) | **Zigyan answer:** (D)

25. In an experimental setup, certain pathogen caused a disease in primates with nasal congestion, sore throat and fever being the common symptoms. The scientists injected an extract from blue-green mold as the first line of action. However, the symptoms did not subside. The possible causative agents of the disease were listed out as follows.

i. a virus

ii. a fungus

iii. a conjugation deficient bacterium

iv. a tapeworm

Choose the correct option from the following that indicate the pathogen.

(A) i, ii (B) i, iii (C) ii, iv (D) iii only

Solution · Q25 **As per Zigyan: (A)**

The extract of blue-green mould (Penicillium) supplies penicillin.

Penicillin stops bacteria from building their peptidoglycan cell wall.

A virus has no cell wall and a fungal wall is made with chitin, so penicillin cannot act on either.

A tapeworm does not cause nasal congestion and sore throat.

No resistance is given for the bacterium, and being unable to conjugate does not create any.

∴ the agents are i and ii.

Why Zigyan differs from IAPT: option (B) drops the fungus, which penicillin cannot harm, and keeps a bacterium, the usual target of penicillin.

Reference: NCERT Biology Class XII, Chapter 8 'Microbes in Human Welfare', section 8.2.2: penicillin is an antibiotic named after the mould Penicillium notatum.

Reference: OpenStax Microbiology, section 14.3 'Mechanisms of Antibacterial Drugs': penicillin-type drugs block the cross-linking needed to build bacterial peptidoglycan.

Reference: NCERT Biology Class XI, Chapter 2 'Biological Classification', sections 2.3 and 2.6: fungal walls are chitin and polysaccharides; a virus is genetic material inside a protein coat.

IAPT answer: (B) | **Zigyan answer:** (A)

26. An organism has 27 pairs of homologous chromosomes. In each daughter cell after completion of mitosis and in each gamete after completion of meiosis II, _____ and _____ chromosomes would be present respectively.

(A) 27 and 27 (B) 54 and 27 (C) 108 and 54 (D) 54 and108

Solution · Q26 **Answer: (B)**

Diploid number:

$$2n = 2 \times 27$$

$$\Rightarrow 2n = 54$$

Mitosis keeps this number, so each daughter cell has 54 chromosomes.

Meiosis halves it. For each gamete:

$$n = 54 \div 2$$

$$\Rightarrow n = 27$$

$\therefore$ 54 and 27

IAPT answer: (B) | **Zigyan answer:** (B)

27. A group of students was studying development of an organism under controlled laboratory conditions. Following observations were made by them.

i. The larvae had a rod-like supporting structure that separated the nervous system and the gut.

ii. A prominent central cavity was present in the transverse section of the part of the nervous system of the larvae; while the adults had cerebral ganglia as the main component of the nervous system.

iii. The eyes were prominently seen in larvae.

iv. The tails were absent in the adults, which the larvae had.

v. A lot of phagocytic activity was observed before conversion of larvae into adults.

vi. The adults had a cuticular exoskeleton.

The organism under study must be belonging to:

(A) Amphibia (B) Pisces (C) Protochordata (D) Arthropoda

Solution · Q27 **Answer: (C)**

The rod between the nervous system and the gut is a notochord, and the nerve cord with a central cavity is hollow. So the larva is a chordate.

In urochordates the notochord is in the larval tail. During metamorphosis the tail is lost, and the adult is left with a ganglion and an outer covering (tunic).

$\therefore$ the organism belongs to Protochordata.

IAPT answer: (C) | **Zigyan answer:** (C)

28. A process is represented in the adjacent figure. The arrows indicate the flow of a biochemical reaction. The arrowhead points to the product, while the base of the arrow indicates the template biomolecule. What do P, Q, R, and S represent?

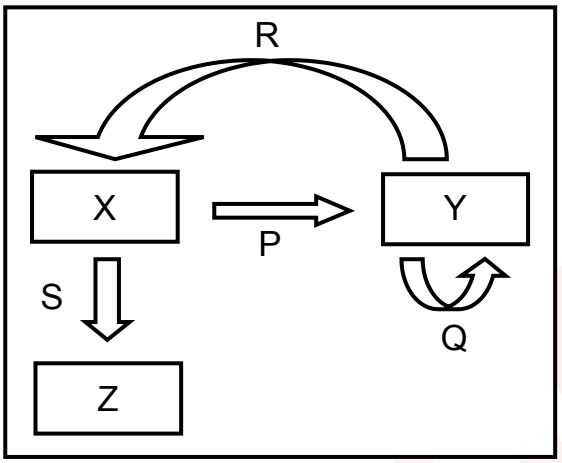

(A) P : Replication, Q : Translation, R : Transcription, S : Reverse Transcription

(B) P : Transcription, Q : Replication, R : Reverse Transcription, S : Translation

(C) P : Reverse Transcription, Q : Replication, R : Translation, S : Transcription

(D) P : Reverse Transcription, Q : Replication, R : Transcription, S : Translation

Solution · Q28 **Answer: (D)**

Q goes from Y back to Y, so Y copies itself: Y is DNA and Q is replication.

R uses DNA as template to make X, so X is RNA and R is transcription.

P makes DNA on an RNA template: reverse transcription.

S makes Z (protein) from RNA: translation.

IAPT answer: (D) | **Zigyan answer:** (D)

29. The whooping cranes were on the verge of extinction with only 21 individuals in wild in 1941. After conservation measures, the cranes are now included in the endangered category by IUCN. The highlight of the conservation efforts is the reintroduction of the whooping cranes in wild. This was possible due to raising of the young cranes in absence of their parents by biologists dressed in crane costumes. Aircraft Guided bird migration technique was used for teaching the captive-bred cranes to follow the scientists to learn the migratory route. What type of animal behaviour might be responsible for these captive-bred cranes to follow the crane costume dressed scientists?

(A) Cognitive learning

(B) Habituation

(C) Operant conditioning

(D) Genetic Imprinting

Solution · Q29 **Answer: (D)**

Young birds learn to follow the first moving 'parent' they meet during a short early period of life. This is imprinting.

These cranes took the costumed biologists as parents and followed them.

In option (D), the term stands for this filial imprinting.

IAPT answer: (D) | **Zigyan answer:** (D)

30. In the baking industry, when the dough is prepared, various ingredients are mixed together with the flour. At one instance, the dough was fermented, but failed to rise sufficiently during the baking process. Choose the correct cause(s) from following possibilities.

i. The salt was mixed before the fermentation process was completed

ii. The sugar was added in excess

iii. Yeast granules were not activated prior to mixing with the flour.

(A) i, iii (B) iii only (C) i, ii, iii (D) i, ii

Solution · Q30 **Answer: (C)**

Dough rises because yeast releases CO_2.

i. Salt added during fermentation draws water from yeast and slows it down.

ii. Too much sugar also puts yeast under osmotic stress.

iii. Dry yeast granules that are not activated work poorly.

All three cut down the CO_2 formed.

∴ i, ii, iii

IAPT answer: (C) | **Zigyan answer:** (C)

31. Given below are four statements.

I. Prokaryotic cells are unicellular while eukaryotes are multicellular.

II. Histones are present in eukaryotes and absent in prokaryotes.

III. The nucleoid contains the genetic material in prokaryotes and eukaryotes.

IV. Prokaryotic flagellum is composed of flagellin while eukaryotic flagellum is composed of tubulin.

Identify which amongst these are false.

(A) I and II (B) III and IV (C) II and III (D) I and III

Solution · Q31 **Answer: (D)**

I is false: many eukaryotes, such as yeast and Amoeba, are unicellular.

II is true: histones pack eukaryotic DNA, while bacteria lack them.

III is false: only prokaryotes have a nucleoid; eukaryotes have a nucleus.

IV is true.

∴ I and III are false.

IAPT answer: (D) | **Zigyan answer:** (D)

32. The students of a college were working on regeneration using *Planaria* (Platyhelminthes) and *Asterias* (Echinodermata). *Planaria* was cut in three pieces, namely, a piece with head, with tail and the middle piece. *Asterias* (bearing five arms) was cut in such a way that after separation, six pieces were obtained, namely, an arm with a portion of the central disc, four pieces cut from tips of each of the remaining arms and the remaining body. The animals were allowed to regenerate completely. How many *Planaria* and *Asterias* respectively will be obtained after the completion of regeneration in both?

(A) 1, 1 (B) 3, 2 (C) 3, 6 (D) 1, 2

Solution · Q32 **Answer: (B)**

Planaria: each of the 3 pieces regenerates into a whole animal.

Asterias: a piece needs a part of the central disc to form a whole animal.

The arm with a portion of the disc and the remaining body give 2 starfish. The 4 arm tips cannot form new animals.

∴ 3 Planaria and 2 Asterias

IAPT answer: (B) | **Zigyan answer:** (B)

33. Fecundity in animal world is the maximum possible ability of an individual to produce offsprings during its entire lifetime. Following factors were checked for their effect on fecundity of different animal models.

i. Availability of food during breeding season

ii. Mode of fertilization

iii. Population density

Which of these factor(s) can regulate fecundity?

(A) i, ii (B) ii, iii

(C) i, ii, iii (D) None of the above

Solution · Q33 **Answer: (C)**

i. Food supply decides the energy available for making eggs or young.

ii. Animals with external fertilisation generally release far more eggs than those with internal fertilisation.

iii. Crowding increases competition and can lower the number of offspring.

∴ all three factors can regulate fecundity.

IAPT answer: (C) | **Zigyan answer:** (C)

34. Rahul sprayed a chemical 'X' on a plant with rosette habit. After few days, he found the internodal distances to have increased suddenly. The chemical 'X' might be:

(A) Ethylene (B) Abscisic acid (C) Auxin (D) Gibberellic acid

Solution · Q34 **Answer: (D)**

A rosette plant has very short internodes.

Gibberellins make the internodes lengthen suddenly (bolting).

∴ X is gibberellic acid.

IAPT answer: (D) | **Zigyan answer:** (D)

35. In case of peppered moths, pale and dark moths are observed. Pale variety is known to be the wild type variety. During industrial revolution, industrial melanism led to prevalence of dark variety around the cities and pale variety continued to be in majority in areas away from the industries. After enforcement of regulations for controlling pollution, reappearance of pale moths in majority was observed around cities again. Driving force(s) for these adaptive changes is/are:

i. Increased pollution around industries

ii. A stable transposition of a gene in moths

iii. Limitations of the vision of birds to differentiate dark moths on darkened barks and pale moths in presence of lichens

iv. Ability of lichens to grow on barks in less polluted areas only.

(A) i, iv (B) i, iii, iv

(C) i, ii (D) i, ii, iii and iv

Solution · Q35 **As per Zigyan: (B)**

This is natural selection, seen as industrial melanism.

i. Pollution darkened the barks around cities.

iii. Birds picked off the moths that stood out and missed the hidden ones.

iv. Lichens grow only in less polluted places, where they hide pale moths.

ii can only be a source of the variation. It does not decide which moth survives, so it is not a driving force.

∴ i, iii, iv

Reference: NCERT Biology Class XII, Chapter 6 'Evolution', section 6.3: soot darkened tree trunks, lichens do not grow in polluted areas, and predators picked out the moths that stood out against the background.

IAPT answer: (B) or (D) | **Zigyan answer:** (B)

36. Any damage or injury to a particular area causes nociceptors to release some chemicals, which carry the signal to the higher centres in the nervous system for the processing and a subsequent action. However, there is a difference in the way in which the stimulus is received which is related to the acuity of the detection. Fingertips are more sensitive as compared to the forearm. Following reasons for the observed phenomenon were suggested.

i. The receptive fields in the fingertip are smaller

ii. The number of nociceptors per receptive field in the forearm is lesser

iii. The amount of prostaglandins released by the nociceptors per receptive field is more in fingertips

The most probable reason(s) for this may be:

(A) i (B) i, iii (C) ii, iii (D) i, ii, iii

Solution · Q36 **As per Zigyan: (A)**

Acuity means telling exactly where a stimulus is and separating nearby points.

i. Smaller receptive fields give higher acuity. This is correct.

ii. Fine detail is set by the size and spacing of the fields, not by a count of nociceptors inside one field.

iii. Prostaglandins come from damaged tissue. They make nociceptors more sensitive but do not help to pinpoint the spot.

∴ only i

Why Zigyan differs from IAPT: prostaglandins formed after tissue damage only make nociceptors respond more easily. They do not make receptive fields smaller, so they cannot explain finer acuity at the fingertips.

Reference: Neuroscience Online (UTHealth Houston), Chapter 6 'Pain Principles', sections 6.2 and 6.4: tissue damage leads to prostaglandin formation, which makes nociceptors more sensitive; large receptive fields locate pain less precisely.

Reference: OpenStax Biology 2e, section 36.2 'Somatosensation': two points felt as one lie within a single receptor's field; touch receptors are denser on fingertips.

IAPT answer: (D) | **Zigyan answer:** (A)

37. On a study tour, plants with leathery leaves with thick cuticle, vivipary, salt glands, apogeotropic roots, and stomata limited to abaxial surface were observed. The plants might be:

(A) Bromeliads
(B) Cycads
(C) Mangroves
(D) None of the above

Solution · Q37 **Answer: (C)**

These are the features of mangroves, which grow in salty, marshy coastal areas.

Their apogeotropic roots (pneumatophores) grow upwards to take in air, and salt glands remove extra salt. Their seeds germinate while still on the parent plant (vivipary).

IAPT answer: (C) | **Zigyan answer:** (C)

38. Rate of photosynthesis in hydrophytes depends on various parameters. The adjacent graph shows the effect of one parameter (while keeping all the others constant) on the rate of photosynthesis. Rate of photosynthesis is plotted on Y axis. Identify the parameter which is plotted along X axis:



(A) light intensity
(B) wavelength
(C) temperature
(D) CO_2 concentration

Solution · Q38 **Answer: (B)**

The graph has two high peaks with a very low dip between them, and it falls again at the end.

This is the pattern of the action spectrum: photosynthesis is high in blue and red light and low in green light.

∴ The X axis shows the wavelength of light.

IAPT answer: (B) | **Zigyan answer:** (B)

39. A 4 μm long bacterial cell was magnified and drawn to a dimension of 6 cm. How many times has it been magnified?

(A) 1.5×10^3 (B) 15×10^4 (C) 1.5×10^4 (D) 1.5

Solution · Q39 **Answer: (C)**

Both lengths in metre:

$$4\ \mu m = 4 \times 10^{-6}\ m$$

$$6\ cm = 6 \times 10^{-2}\ m$$

Magnification is the drawn size divided by the actual size.

$$M = \frac{6 \times 10^{-2}}{4 \times 10^{-6}}$$

$$\Rightarrow M = 1.5 \times 10^4$$

IAPT answer: (C) | **Zigyan answer:** (C)

40. Four different human body fluid samples were subjected to quantification of hydrogen ion concentration. mEq/L is the unit of measurement for hydrogen ion concentration. The results of the experiment were as follows:

Sample A: 1.6×10^2 units

Sample B: 4.5×10^{-5} units

Sample C: 1×10^{-3} units

Sample D: 3×10^{-2} units

Identify the samples in sequence from A to D.

(A) Gastric HCl, Venous blood, Intracellular Fluid, Urine

(B) Venous blood, Intracellular Fluid, Gastric HCl, Urine

(C) Urine, Gastric HCl, Venous blood, Intracellular Fluid

(D) Intracellular Fluid, Urine, Gastric HCl, Venous blood

Solution · Q40 **Answer: (A)**

1 mEq/L of H^+ means 10^{-3} mol/L. For a sample reading x:

$$pH = -\log (x \times 10^{-3})$$

For A:

$$pH \approx 0.80$$

For B:

$$pH \approx 7.35$$

For C:

$$pH = 6.0$$

For D:

$$pH \approx 4.5$$

A is strongly acidic, so it is gastric HCℓ. B matches venous blood.

Intracellular fluid has a pH of about 6.0 to 7.4, so C is this fluid. D is acidic urine.

IAPT answer: (A) | **Zigyan answer:** (A)

41. Four gram of mixture of calcium carbonate and sand is treated with excess of HCl and 0.880 g of carbon-di-oxide is produced. What is the percentage of calcium carbonate in original mixture?

(A) 40 % (B) 50% (C) 55% (D) 45%

Solution · Q41 **Answer: (B)**

Sand does not react with the acid.

$CaCO_3 + 2HC\ell \rightarrow CaC\ell_2 + H_2O + CO_2$

Moles of carbon dioxide:

$$n = \frac{0.880}{44} = 0.02 \text{ mol}$$

Moles of calcium carbonate are the same. Its mass:

$$m = 0.02 \times 100 = 2 \text{ g}$$

Percentage in the mixture:

$$\frac{2}{4} \times 100 = 50$$

∴ The mixture has 50% calcium carbonate.

IAPT answer: (B) | **Zigyan answer:** (B)

42. How many sigma bonds are present between any two carbon atoms in fullerenes?

(A) 1 (B) 2 (C) 3 (D) 4

Solution · Q42 **Answer: (A)**

In a fullerene, each carbon atom is joined to three carbon atoms by two single bonds and one double bond.

A single bond is one σ bond. A double bond has one σ bond and one π bond.

∴ Two bonded carbon atoms always have just one σ bond between them.

IAPT answer: (A) | **Zigyan answer:** (A)

43. Gammaxene insecticide powder is prepared by the reaction given in the adjacent box. If 78 g of benzene when reacted with 106.5 g of chlorine, how much Gammaxene would be formed?

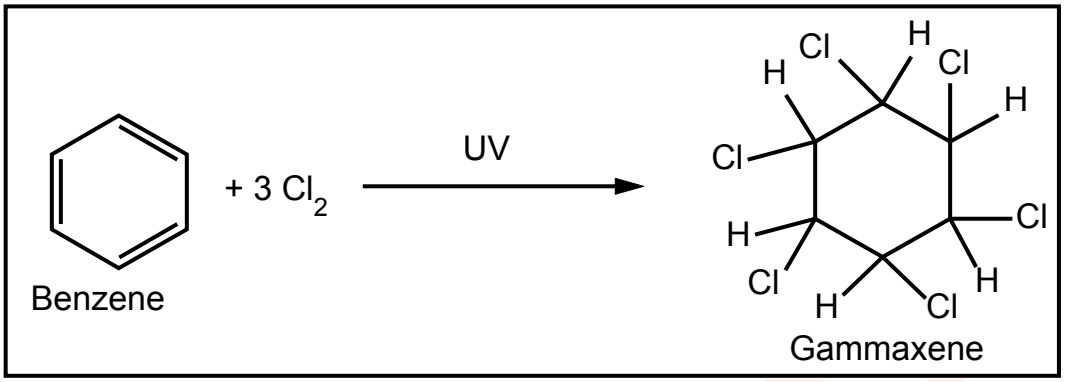

(A) 140 g (B) 154.5 g (C) 145.5 g (D) 160 g

Solution · Q43 **Answer: (C)**

$C_6H_6 + 3C\ell_2 \rightarrow C_6H_6C\ell_6$

Moles of benzene:

$$\frac{78}{78} = 1 \text{ mol}$$

Moles of chlorine:

$$\frac{106.5}{71} = 1.5 \text{ mol}$$

1 mol of benzene needs 3 mol of chlorine, so chlorine is the limiting reagent.

Moles of gammaxene formed:

$$\frac{1.5}{3} = 0.5 \text{ mol}$$

Its molar mass is 291 g/mol.

$$m = 0.5 \times 291 = 145.5 \text{ g}$$

IAPT answer: (C) | **Zigyan answer:** (C)

44. An element Y is a white translucent solid at room temperature and exhibits various allotropic forms. Some compounds of element Y find application in agricultural industry. Y forms two solid oxides which dissolve in water to form comparatively weak acids. The element Y is:

(A) Sulphur (B) Nitrogen (C) Phosphorous (D) Carbon

Solution · Q44 **Answer: (C)**

White phosphorus is a translucent waxy solid; red and black phosphorus are other allotropes. Phosphates are used as fertilisers.

Its two solid oxides react with water:

$P_4O_6 + 6H_2O \rightarrow 4H_3PO_3$

$P_4O_{10} + 6H_2O \rightarrow 4H_3PO_4$

$\therefore$ Y is phosphorus.

IAPT answer: (C) | **Zigyan answer:** (C)

45. A student was studying reactions of metals with dilute NaOH at room temperature. The student took dilute NaOH in four different test tubes and added copper powder to test tube A, zinc dust to test tube B, aluminium powder to test tube C and iron powder to test tube D and observed effervescence in__.

(A) Test tubes A & B (B) Test tubes B & C (C) Test tubes C & D (D) Test tubes A & D

Solution · Q45 **Answer: (B)**

Zinc and aluminium are amphoteric metals. They react with NaOH and give hydrogen gas.

$Zn + 2NaOH \rightarrow Na_2ZnO_2 + H_2\uparrow$

$2A\ell + 2NaOH + 2H_2O \rightarrow 2NaA\ell O_2 + 3H_2\uparrow$

Copper and iron do not react with dilute NaOH. So effervescence is seen in test tubes B and C.

IAPT answer: (B) | **Zigyan answer:** (B)

46. Which of the following polymeric material will be ideal for remoulding?

(A) Polythene and Melamine (B) Polyvinyl chloride and Polythene
(C) Melamine and Bakelite (D) Bakelite and Polyvinyl chloride

Solution · Q46 **Answer: (B)**

Thermoplastics soften on heating, so they can be remoulded again and again. Polythene and polyvinyl chloride are thermoplastics.

Melamine and Bakelite are thermosetting plastics.

IAPT answer: (B) | **Zigyan answer:** (B)

47. A magician performed following act: He dipped Rs. 50 note in a 50% solution of alcohol in water and held it on the burning flame, but the note did not burn. The reason behind this is -

(A) The alcohol kept on dousing the fire
(B) Air required for burning was not available
(C) The Rs 50 note failed to reach ignition temperature
(D) The Rs. 50 note is fire proof

Solution · Q47 **Answer: (C)**

The alcohol on the note burns, while the water in the solution takes up much of the heat as it evaporates.

So the note does not get hot enough to reach its ignition temperature.

IAPT answer: (C) | **Zigyan answer:** (C)

48. Which of the following is iso-structural with CO_2?

(A) NO_2 (B) N_2O_4 (C) NO (D) N_2O

Solution · Q48 **Answer: (D)**

Carbon dioxide is a linear molecule:

$$O=C=O$$

Dinitrogen oxide is also linear:

$N\equiv N^+-O^-$

Both have 16 valence electrons.

NO_2 is bent, N_2O_4 is planar with bent NO_2 units, and NO has only two atoms.

IAPT answer: (D) | **Zigyan answer:** (D)

49. Substance X is white crystalline solid which melts after 10 seconds on burner flame. It is soluble in water and insoluble in CCl_4. It is a poor conductor of electricity in molten state as well as in the form of aqueous solution, hence we conclude that substance X is

(A) an ionic compound
(B) a non polar covalent compound
(C) a polar covalent compound
(D) a pure element

Solution · Q49 **Answer: (C)**

X melts easily and is a poor conductor, both when molten and in water.

So it is a covalent compound, not an ionic one.

It dissolves in water but not in $CC\ell_4$, so it is polar.

∴ X is a polar covalent compound.

IAPT answer: (C) | **Zigyan answer:** (C)

50. In a beaker 50 ml of a normal HCl solution was taken and NH_3 gas was passed through it for some time. The contents of the beaker were then titrated, which required 60 ml of semi normal NaOH solution. How much ammonia was passed through the beaker?

(A) 0.85 g (B) 0.34 g (C) 0.51 g (D) 0.4 g

Solution · Q50 **Answer: (B)**

Milliequivalents of $HC\ell$ taken:

$$50 \times 1 = 50$$

Milliequivalents of $HC\ell$ left, found from the NaOH used:

$$60 \times 0.5 = 30$$

Milliequivalents of NH_3 that used up the acid:

$$\Rightarrow 50 - 30 = 20$$

Mass of NH_3:

$$\Rightarrow 20 \times 10^{-3} \times 17 \text{ g} = 0.34 \text{ g}$$

IAPT answer: (B) | **Zigyan answer:** (B)

51. Which is the correct order of metals with reference to their melting point in increasing order?

(A) Hg, Ga, Li, Ca (B) Ca, Li, Ga, Hg (C) Hg, Li, Ga, Ca (D) Hg, Ga, Ca, Li

Solution · Q51 **Answer: (A)**

Approximate melting points:

Hg: −39 °C, Ga: 30 °C

Li: 181 °C, Ca: 842 °C

∴ the increasing order is Hg, Ga, Li, Ca.

IAPT answer: (A) | **Zigyan answer:** (A)

52. Sodium tungstate has formula Na_2WO_4, lead phosphate has formula $Pb_3(PO_4)_2$, formula for lead tungstate should be:

(A) $PbWO_4$ (B) $Pb_2(WO_4)_3$ (C) $Pb_3(WO_4)_2$ (D) $Pb_3(WO_4)_4$

Solution · Q52 **Answer: (A)**

From Na_2WO_4, the tungstate ion is WO_4^{2-}.

From $Pb_3(PO_4)_2$, with PO_4^{3-} ions, the lead ion is Pb^{2+}.

One Pb^{2+} balances the charge of one WO_4^{2-}.

$\therefore$ lead tungstate is $PbWO_4$.

IAPT answer: (A) | **Zigyan answer:** (A)

53. What is the ratio of reducing agent to oxidizing agent, if the following reaction is correctly balanced?
$NH_3 + O_2 \rightarrow NO + H_2O$

(A) 4:5 (B) 5:4 (C) 5:3 (D) 3:5

Solution · Q53 **Answer: (A)**

Balanced equation:

$4NH_3 + 5O_2 \rightarrow 4NO + 6H_2O$

N is oxidised from −3 to +2, so NH_3 is the reducing agent.

O_2 is reduced, so it is the oxidizing agent.

$\therefore$ their ratio is 4 : 5.

IAPT answer: (A) | **Zigyan answer:** (A)

54. Arrange following solutions in increasing hydronium ion concentration. The solutions are:

(P) 0.1 M HCl

(Q) 0.1 M H_2SO4

(R) 0.001 M NH_4OH

(S) 0.001 M $Ca(OH)_2$.

The correct order will be

(A) P > Q > R > S (B) Q > P > S > R (C) S > R > Q > P (D) S > R > P > Q

Solution · Q54 **As per Zigyan: no option is correct**

P: HCℓ is a strong acid.

$$[H_3O^+] = 0.1 \text{ M}$$

Q: H_2SO_4 is a strong acid that can give more than one H^+ per molecule.

$$[H_3O^+] > 0.1 \text{ M}$$

S: $Ca(OH)_2$ is a strong base.

$$[OH^-] = 2 \times 0.001\ M = 0.002\ M$$

$$\Rightarrow [H_3O^+] = 5 \times 10^{-12}\ M$$

R: NH_4OH is a weak base.

$$[OH^-] < 0.001\ M$$

$$\Rightarrow [H_3O^+] > 10^{-11}\ M$$

$\therefore$ the increasing order is:

$$S < R < P < Q$$

Written with the sign used in the options:

$$Q > P > R > S$$

This order is not among the options.

Reference: NCERT Chemistry Class XI (Part I), Unit 6 'Equilibrium', section 6.11: $HC\ell$ and H_2SO_4 are strong acids, almost completely dissociated in water.

Reference: The same unit, section 6.11.4 and Table 6.7: a weak base is only partly ionised; ammonia (NH_4OH) is listed as a weak base.

IAPT answer: question dropped by IAPT | **Zigyan answer:** none of the options is correct

55. In one litre of pure water, 44.4 g of calcium chloride is dissolved. The number of ions in one mL of the resultant solution is:

(A) 7.23×10^{23} (B) 7.23×10^{20} (C) 4.82×10^{23} (D) 4.82×10^{20}

Solution · Q55 **Answer: (B)**

Volume of the solution is taken as 1 L.

Moles of $CaC\ell_2$ in it:

$$n = \frac{44.4}{111} = 0.4$$

Each unit of $CaC\ell_2$ gives 3 ions: one Ca^{2+} and two $C\ell^-$.

Moles of ions in 1 mL:

$$\Rightarrow 3 \times 0.4 \times 10^{-3} = 1.2 \times 10^{-3}$$

Number of ions:

$$\Rightarrow 1.2 \times 10^{-3} \times 6.022 \times 10^{23} = 7.23 \times 10^{20}$$

IAPT answer: (B) | **Zigyan answer:** (B)

56. A zinc rod was dipped in 100 cm^3 of 1M copper chloride solution. After certain time the molarity of Cu^{2+} ions in the solution was found to be 0.8 M. If the weight of zinc rod is 20 g, then the molarity of chloride ions is_____.

(A) 2 M (B) 1.5 M (C) 1 M (D) 0.5 M

Solution · Q56 **Answer: (A)**

Reaction:

$Zn + CuC\ell_2 \rightarrow ZnC\ell_2 + Cu$

$C\ell^-$ ions take no part in the reaction, and the volume stays the same.

So their molarity is the same as in the starting 1 M $CuC\ell_2$:

$$[C\ell^-] = 2 \times 1\ M = 2\ M$$

IAPT answer: (A) | **Zigyan answer:** (A)

57. When four dilute solutions of (I) vinegar, (II) common salt, (III) caustic soda and (IV) baking soda are tested with universal indicator which will be the correct observation

(A) I- Green, II - Violet, III - Blue, IV - Red

(B) I - Green, II - Blue, III -Violet, IV- Red

(C) I - Red, II - Green, III - Violet, IV - Blue

(D) I-Red, II- Violet, III - Green, IV – Blue

Solution · Q57 **Answer: (C)**

Vinegar is acidic, so it shows red.

Common salt solution is neutral, so it shows green.

Caustic soda is a strong base, so it shows violet.

Baking soda is a weak base, so it shows blue.

∴ I is red, II green, III violet and IV blue.

IAPT answer: (C) | **Zigyan answer:** (C)

58. Which of the following species is / are isoelectronic with Neon?

(i) N^{3-}

(ii) Mg^{2+}

(iii) K^+

(iv) Ca^{2+}

(A) only (iv) (B) only (ii) (C) both (i) & (ii) (D) both (i) & (iii)

Solution · Q58 **Answer: (C)**

Neon has 10 electrons.

Electrons in each ion:

$$N^{3-}: 7 + 3 = 10$$

$$Mg^{2+}: 12 - 2 = 10$$

$$K^+: 19 - 1 = 18$$

$$Ca^{2+}: 20 - 2 = 18$$

∴ both (i) and (ii) are isoelectronic with neon.

IAPT answer: (C) | **Zigyan answer:** (C)

59. Which of the following gases will have equal volume at STP, if the weight of gases is 14.0 g?

(i) N_2O

(ii) NO_2

(iii) N_2

(iv) CO

(A) (i) & (ii) (B) (ii) & (iii) (C) (i) & (iii) (D) (iii) & (iv)

Solution · Q59 **Answer: (D)**

At STP, equal volumes of gases have equal numbers of moles.

As each mass is the same, the molar masses must be equal.

Molar masses in g mol^{-1}:

N_2O: 44, NO_2: 46

N_2: 28, CO: 28

For each of N_2 and CO:

$$n = \frac{14.0}{28} = 0.5$$

∴ (iii) and (iv) have equal volumes.

IAPT answer: (D) | **Zigyan answer:** (D)

60. Which of the following are not ionic?

(i) $AlCl_3$

(ii) $CaCl_2$

(iii) $MgCl_2$

(iv) LiCl

(A) (i) and (iv) (B) (i) and (ii) (C) (ii) and (iii) (D) (iii) and (iv)

Solution · Q60 **As per Zigyan: (A)**

$A\ell C\ell_3$: the small $A\ell^{3+}$ ion with a high charge pulls the electrons of $C\ell^-$ strongly, so the compound is covalent.

$LiC\ell$: the very small Li^+ ion also polarises $C\ell^-$, which gives it marked covalent character.

$CaC\ell_2$ and $MgC\ell_2$ are ionic.

∴ (i) and (iv) are the ones that are not ionic.

Reference: OpenStax Chemistry 2e, section 2.6 'Ionic and Molecular Compounds': aluminium chloride is not ionic, although it joins a metal with a non-metal.

Reference: NCERT Chemistry Class XI (Part I), Unit 4 'Chemical Bonding and Molecular Structure', section 4.3.6: by Fajans' rules, a smaller cation and a higher cation charge give more covalent character.

Reference: LibreTexts, Chemistry of the Main Group Elements (Barron), section 3.3 'The Anomalous Chemistry of Lithium': lithium tends to form polar covalent bonds rather than ionic ones.

IAPT answer: (A) | **Zigyan answer:** (A)

61. Apples dropping from apple trees were observed by many people before Newton. But why they fall, was explained by Isaac Newton postulating the law of universal gravitation. Which of the following statements best describes the situation?

(A) The force of gravity acts only on the apple

(B) The apple is attracted towards the surface of the earth

(C) Both earth and apple experience the same force of attraction towards each other

(D) Apple falls due to earth's gravity and hence only (A) is true and (C) is absurd

Solution · Q61 **Answer: (C)**

By the law of gravitation, the earth and the apple attract each other.

By Newton's third law, these two forces are equal in size and opposite in direction.

∴ both feel the same force of attraction.

IAPT answer: (C) | **Zigyan answer:** (C)

62. A rectangular metal plate, shown in the adjacent figure has a charge of 420 μC assumed to be uniformly distributed over it. Then how much is the charge over the shaded area? No part of metal plate is cut. (Circles and the diagonal are shown for clarity only. π = 22/7)

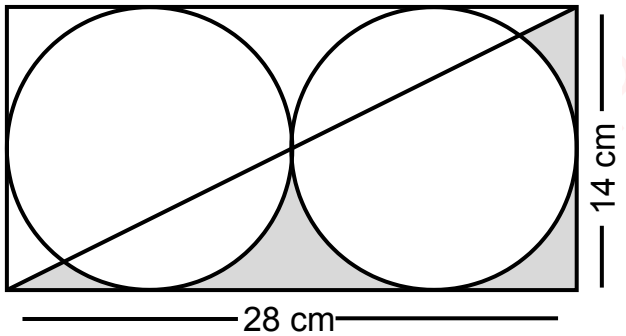

(A) 45 μC (B) 450 μC (C) 15 μC (D) 150 μC

Solution · Q62 **Answer: (A)**

Each circle has a radius of 7 cm.

Area of the plate:

$$28 \times 14 = 392 \text{ cm}^2$$

Area of the two circles:

$$2 \times 22/7 \times 7^2 = 308 \text{ cm}^2$$

Area outside the circles:

$$\Rightarrow 392 - 308 = 84 \text{ cm}^2$$

By symmetry, the shaded part (below the diagonal) is half of this.

$$\Rightarrow 84/2 = 42 \text{ cm}^2$$

The charge is uniform, so it is proportional to the area.

$$q = 420 \times \frac{42}{392} = 45 \ \mu C$$

IAPT answer: (A) | **Zigyan answer:** (A)

63. In the adjacent circuit, the voltages across AD, BD and CD are 2 V, 6 V and 8 V respectively. If resistance R_A = 1 kΩ, then the values of resistances R_B and R_C are _____ and ____ respectively.

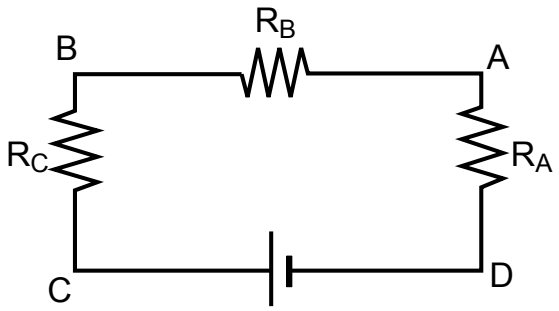

(A) 4 kΩ and 6 kΩ
(B) 2 kΩ and 1 kΩ
(C) 1 kΩ and 2 kΩ
(D) data insufficient as battery voltage is not given

Solution · Q63 **Answer: (B)**

The resistors are in series, so one current flows through all of them.

Current, from the voltage across AD:

$$I = \frac{2\text{ V}}{1\text{ k}\Omega} = 2\text{ mA}$$

Voltages across the other two resistors:

$$V_{AB} = 6 - 2 = 4\text{ V}$$

$$V_{BC} = 8 - 6 = 2\text{ V}$$

$$\Rightarrow R_B = 4\text{ V} / 2\text{ mA} = 2\text{ k}\Omega$$

$$\Rightarrow R_C = 2\text{ V} / 2\text{ mA} = 1\text{ k}\Omega$$

IAPT answer: (B) | **Zigyan answer:** (B)

64. A new linear scale of temperature measurement is to be designed. It is called a 'Z scale' on which the freezing and boiling points of water are 20 Z and 220 Z respectively. What will be the temperature shown on the 'Z scale' corresponding to a temperature of 20° C on the Celsius scale?

(A) 10 Z (B) 20 Z (C) 40 Z (D) 60 Z

Solution · Q64 **Answer: (D)**

On a linear scale, the same fraction of the freezing to boiling interval is covered on both scales.

$$\frac{Z - 20}{220 - 20} = \frac{20 - 0}{100 - 0}$$

$$\Rightarrow Z - 20 = 40$$

$$\Rightarrow Z = 60$$

$\therefore$ the reading is 60 Z.

IAPT answer: (D) | **Zigyan answer:** (D)

65. Consider the motion of a small spherical steel body of mass m, falling freely through a long column of a fluid that opposes its motion with a force proportional to its speed. Initially the body moves down fast, but after some time attains a constant velocity known as terminal velocity. If weight mg, opposing force (F_v) and buoyant force (F_b) act on the body, then the correct equation relating these forces, after the terminal velocity is reached, is:

(A) $mg + F_v = F_b$ (B) $mg = F_v - F_b$ (C) $mg = F_v + F_b$ (D) none

Solution · Q65 **Answer: (C)**

Weight acts downward and the buoyant force acts upward.

The body moves down, so the opposing force also acts upward.

At terminal velocity the acceleration is zero, so the net force is zero.

$$\Rightarrow mg = F_v + F_b$$

IAPT answer: (C) | **Zigyan answer:** (C)

66. A piece of wire P and three identical cells are connected in series. An amount of heat is generated in a certain time interval in the wire due to passage of current. Now the circuit is modified by replacing P with another wire Q and N identical cells, all connected in series. Q is four times longer in length than P. The wire P and Q are of same material and have the same diameter. If the heat generated in second situation is also same as before in the same time interval, then find N.

(A) 4 (B) 6 (C) 16 (D) 36

Solution · Q66 **Answer: (B)**

The wires differ only in length. If P has resistance R, then Q has resistance 4R.

Take each cell of emf V, with no internal resistance.

For n cells, heat produced in a wire of resistance R in time t:

$$H = \frac{(nV)^2 t}{R}$$

For equal heat in equal time:

$$\frac{(3V)^2}{R} = \frac{(NV)^2}{4R}$$

$$\Rightarrow N^2 = 36$$

$$\Rightarrow N = 6$$

IAPT answer: (B) | **Zigyan answer:** (B)

67. Some waveforms among I, II, III and IV superpose (add graphically) to produce the waveforms P, Q, R and S. Among the following, match the pairs that give the correct combinations:

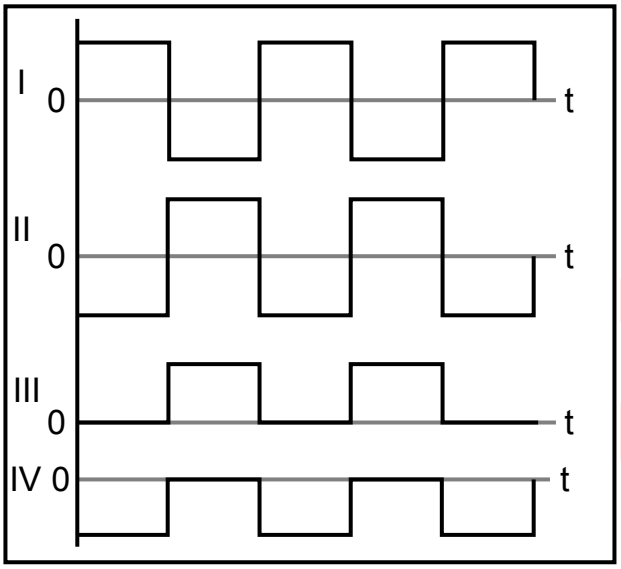

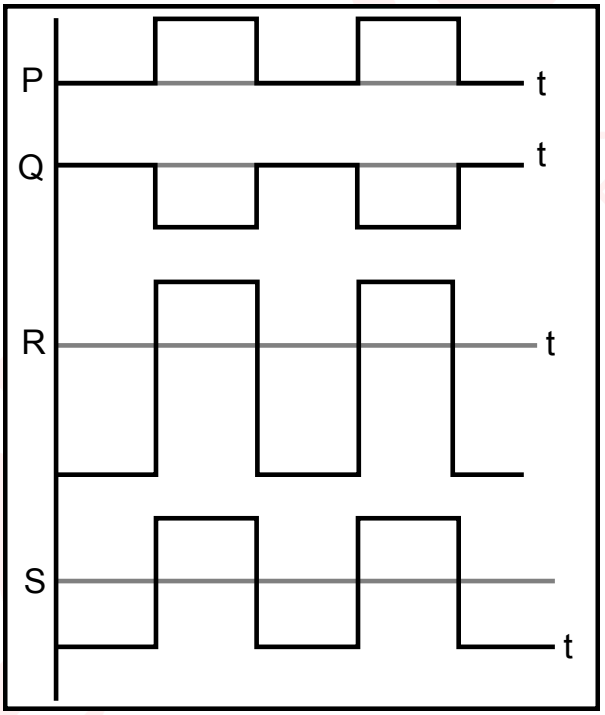

Resultant	Superposition of
P	(K) III and IV
Q	(L) II and IV
R	(M) I, II and III
S	(N) I and IV
	(O) II and III

(A) P ↔ O, Q ↔ N, R ↔ L, S ↔ M

(B) P ↔ M, Q ↔ N, R ↔ L, S ↔ K

(C) P ↔ M, Q ↔ N, R ↔ K, S ↔ L

(D) P ↔ O, Q ↔ M, R ↔ L, S ↔ K

Solution · Q67 **Answer: (B)**

Take the height of I as 1 unit. For the five equal time parts, in order:

I: +1, −1, +1, −1, +1

II: −1, +1, −1, +1, −1

III: 0, +1, 0, +1, 0

IV: −1, 0, −1, 0, −1

Add the values part by part.

III + IV: −1, +1, −1, +1, −1, which is S (K).

II + IV: −2, +1, −2, +1, −2, which is R (L).

I + II + III: 0, +1, 0, +1, 0, which is P (M).

I + IV: 0, −1, 0, −1, 0, which is Q (N).

∴ P ↔ M, Q ↔ N, R ↔ L, S ↔ K

IAPT answer: (B) | **Zigyan answer:** (B)

68. At any instant of time, the total energy (E) of a simple pendulum is equal to the sum of its kinetic energy $\left(\frac{1}{2}mv^2\right)$ and potential energy $\left(\frac{1}{2}kx^2\right)$, where, m is the mass, v is the velocity, x is the displacement of the bob and k is a constant for the pendulum. The amplitude of oscillation of the pendulum is 10 cm and its total energy is 4 mJ. Find k.

(A) 1.8 Nm^{-1}

(B) 0.8 Nm^{-1}

(C) 0.5 Nm^{-1}

(D) data insufficient

Solution · Q68 **Answer: (B)**

At the extreme position the speed is zero and the displacement equals the amplitude A.

$$E = \frac{1}{2}kA^2$$

$A = 0.1$ m and $E = 4 \times 10^{-3}$ J

$$k = \frac{2 \times 4 \times 10^{-3}}{(0.1)^2}$$

$$\Rightarrow k = 0.8 \text{ N m}^{-1}$$

IAPT answer: (B) | **Zigyan answer:** (B)

69. A rigid body of mass m is suspended from point O using an inextensible string of length L. When it is displaced through an angle θ, what is the change in the potential energy of the mass? (Refer adjacent figure.)

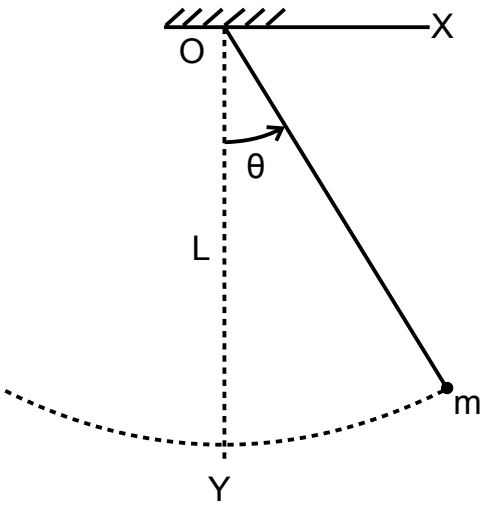

(A) mg L (1 – cos θ) (B) mg L (cos θ – 1) (C) mg L cos θ (D) mg L (1 – sin θ)

Solution · Q69 **Answer: (A)**

Depth of the mass below O when the string is vertical:

$$h_1 = L$$

Depth when the string makes angle θ:

$$h_2 = L \cos \theta$$

Rise of the mass:

$$h = L - L \cos \theta$$

Change in potential energy:

$$\Delta U = mgh$$

$$\Rightarrow \Delta U = mgL(1 - \cos \theta)$$

IAPT answer: (A) | **Zigyan answer:** (A)

70. Refer to the adjacent figure. A variable force F is applied to a body of mass 6 kg at rest. The body moves along x - axis as shown. The speed of the body at x = 5 m and x = 6 m is ___ and ___ respectively.

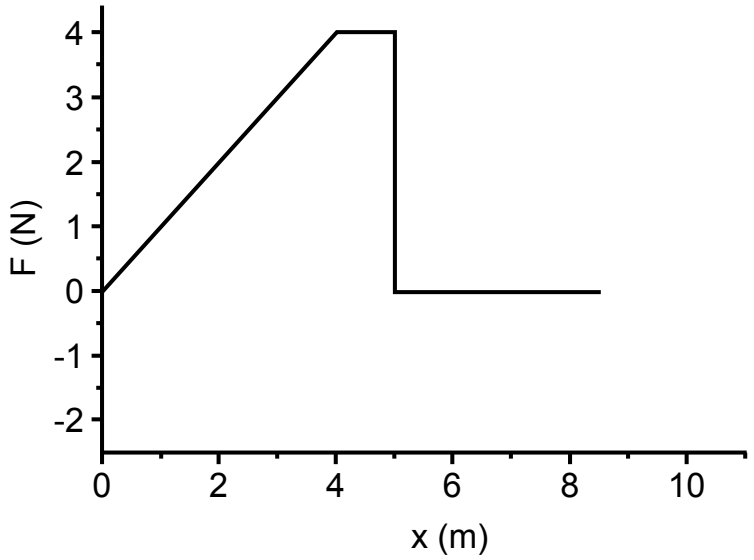

(A) 0 m/s, 0 m/s (B) 0 m/s, 2 m/s (C) 2 m/s, 2 m/s (D) 2 m/s, 4 m/s

Solution · Q70 **Answer: (C)**

Work done is the area under the F–x graph. Take F as the only force doing work.

Area up to 5 m, a triangle and a rectangle:

$$W = \frac{1}{2} \times 4 \times 4 + 4 \times 1 = 12\ J$$

The body starts from rest. By the work-energy theorem:

$$\frac{1}{2} \times 6 \times v^2 = 12$$

$$\Rightarrow v = 2\ m/s$$

Beyond 5 m the force is zero, so the speed stays the same.

$\therefore$ the speeds at 5 m and 6 m are 2 m/s and 2 m/s.

IAPT answer: (C) | **Zigyan answer:** (C)

71. When a charged particle with charge q and mass m enters uniform magnetic field B with velocity v at right angles to B, the force on the moving particle is given by qvB. This force acts as the centripetal force making the charged particle go in a uniform circular motion with radius $r = \frac{mv}{Bq}$. Now if a hydrogen ion and a deuterium ion enter the magnetic field with velocities in the ratio 2:1 respectively, then the ratio of their radii will be_____.

(A) 1:2 (B) 2:1 (C) 1:4 (D) 1:1

Solution · Q71 **Answer: (D)**

Both ions carry the same charge and move in the same field.

$$\therefore r \propto mv$$

A deuterium ion has nearly twice the mass of a hydrogen ion.

$$\frac{r_H}{r_D} = \frac{m \times 2v}{2m \times v} = 1$$

$$\Rightarrow r_H : r_D = 1 : 1$$

IAPT answer: (D) | **Zigyan answer:** (D)

72. A piece of ice is floating in water at 4° C in a beaker. When the ice melts completely, the water level in the beaker will

(A) rise (B) fall

(C) remains unchanged (D) unpredictable

Solution · Q72 **Answer: (A)**

Floating ice displaces water of the same mass as its own.

The ice takes heat from the water to melt. With no heat from outside, the water cools below 4 °C.

At 4 °C the melted ice would just fill the volume that the ice had displaced.

Water is densest at 4 °C, so the colder water needs more volume.

∴ the water level rises.

IAPT answer: (A) | **Zigyan answer:** (A)

73. In a screw-nut assembly (shown below) the nut is held fixed in its position and the screw is allowed to rotate inside it. A convex lens (L) of focal length 6.0 cm is fixed on the nut. An object pin (P) is attached to the screw head. The image of the object is observed on a screen Y. When the screw head is rotated through one rotation, the linear distance moved by the screw tip is 1.0 mm. The observations are made only when the image is obtained in the same orientation on the screen. At a certain position of P, the image formed is three times magnified as that of the pin height. Through how many turns should the screw head be rotated so that the image is two times magnified?

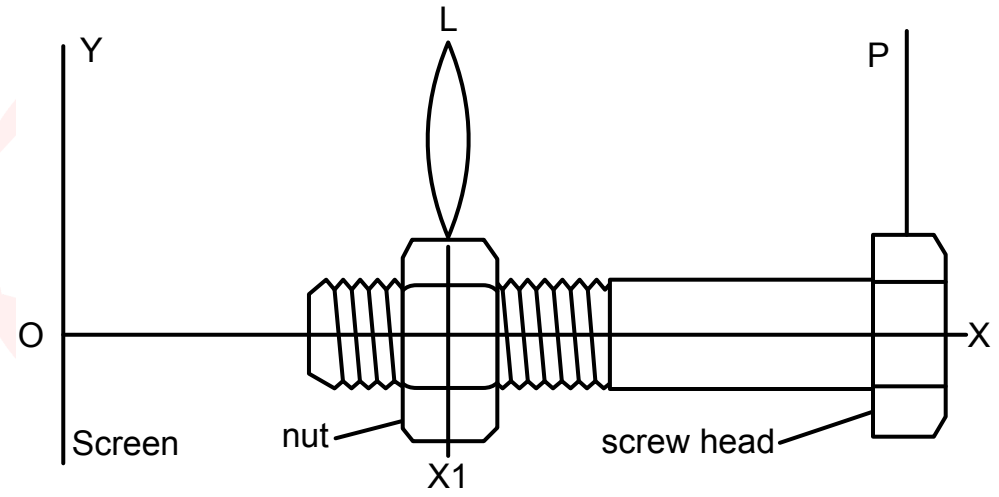

(A) 8 (B) 10 (C) 12 (D) 14

Solution · Q73 **Answer: (B)**

Real image on the screen, of magnification m (distances as magnitudes):

$$v = mu$$

$$\frac{1}{mu} + \frac{1}{u} = \frac{1}{f}$$

$$\Rightarrow u = f\left(1 + \frac{1}{m}\right)$$

Image three times magnified:

$$u_1 = 6 \times \frac{4}{3} = 8 \text{ cm}$$

Image two times magnified:

$$u_2 = 6 \times \frac{3}{2} = 9 \text{ cm}$$

Shift of the pin:

$$\Rightarrow 9 - 8 = 1 \text{ cm} = 10 \text{ mm}$$

Each turn shifts it by 1.0 mm (the screen is moved to refocus).

$\therefore$ number of turns:

$$\Rightarrow \frac{10}{1.0} = 10$$

IAPT answer: (B) | **Zigyan answer:** (B)

74. A school is located between two cliffs. When the metal bell is struck by school attendant, first echo is heard by him after 2.4 s and second echo follows after 2.0 s for him at the same position near the bell. If the velocity of sound in air is 340 ms^{-1} at the temperature of the surroundings, then the distance between the cliffs is approximately____.

(A) 0.488 km (B) 0.751 km (C) 1.16 km (D) 1.41 km

Solution · Q74 **Answer: (C)**

The second echo comes 2.0 s after the first one.

Times of the two echoes:

$$t_1 = 2.4 \text{ s and } t_2 = 2.4 + 2.0 = 4.4 \text{ s}$$

Distances of the two cliffs:

$$d_1 = \frac{340 \times 2.4}{2} = 408 \text{ m}$$

$$d_2 = \frac{340 \times 4.4}{2} = 748 \text{ m}$$

Distance between the cliffs:

$$\Rightarrow d_1 + d_2 = 1156 \text{ m} \approx 1.16 \text{ km}$$

IAPT answer: (C) | **Zigyan answer:** (C)

75. The triangular face of a crown glass prism ABC is isosceles. Length AB = length AC and the rectangular face with edge AC is silvered. A ray of light is incident normally on rectangular face with edge AB. It undergoes reflections at AC and AB internally and it emerges normally through the rectangular base with edge BC. Then angle BAC of the prism is____.

(A) 24° (B) 30° (C) 36° (D) 42°

Solution · Q75 **Answer: (C)**

The ray enters through AB undeviated and meets AC.

Angle of incidence at AC:

$$i_1 = A$$

The reflected ray meets AB. Angle of incidence there:

$$i_2 = 2A$$

The ray reflected from AB is normal to BC. So the angle it makes with the normal to AB equals the angle between AB and BC:

$$2A = \angle B$$

The triangle is isosceles:

$$\angle B = \angle C = 2A$$

$$\Rightarrow A + 2A + 2A = 180°$$

$$\Rightarrow A = 36°$$

IAPT answer: (C) | **Zigyan answer:** (C)

76. The radius of curvature of a convex mirror is 'x'. The distance of an object from focus of this mirror is 'y'. Then what is the distance of image from the focus?

(A) $y^2 / 4x$ (B) x^2 / y (C) $x^2 / 4y$ (D) $4y^2 / x$

Solution · Q76 **Answer: (C)**

Let the image be at a distance d from the focus.

By Newton's formula:

$$y \times d = f^2$$

Focal length of the mirror:

$$f = \frac{x}{2}$$

$$\Rightarrow d = \frac{x^2}{4y}$$

IAPT answer: (C) | **Zigyan answer:** (C)

77. A physics teacher and his family are travelling in a car on a highway during a severe lightning storm. Choose the correct option:

(A) Safest place will be inside the car as the charges due to lightning tend to remain on the metal sheet / skin of the vehicle if struck by lightning.

(B) It's too dangerous to be inside the car. As the car has a metal body the charges tend to accumulate on the surface and will generate a strong electric field inside the car.

(C) Safest place is under a tree. It's better to get drenched under a tree as the wet tree will provide a path to the charges for earthing.

(D) It is safer to exit the car and stand on open ground

Solution · Q77 **Answer: (A)**

The metal body of a car acts as an electrostatic shield (Faraday cage).

If lightning strikes, the charge stays on the outer metal skin and passes to the ground, while the field inside remains very small.

∴ the safest place is inside the car.

IAPT answer: (A) | **Zigyan answer:** (A)

Zigyan Eduvision Pvt Ltd

78. A conductor in the form of a circular loop is carrying current I. The direction of the current is as shown. Then which figure represents the correct direction of magnetic field lines on the surfaces of the planes XY and XZ. (Consider those surfaces of the XY and XZ planes which are seen in the figure.)

(A)

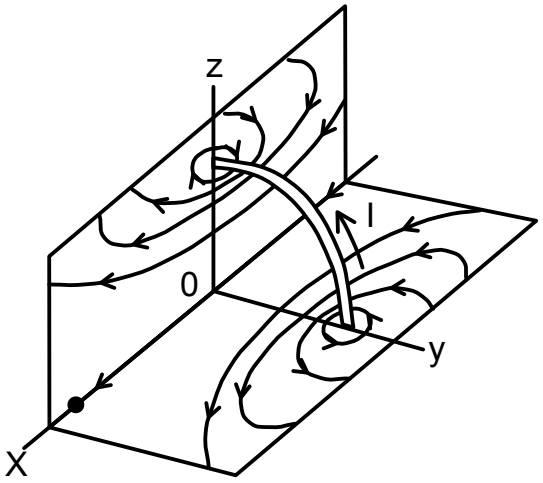

(B)

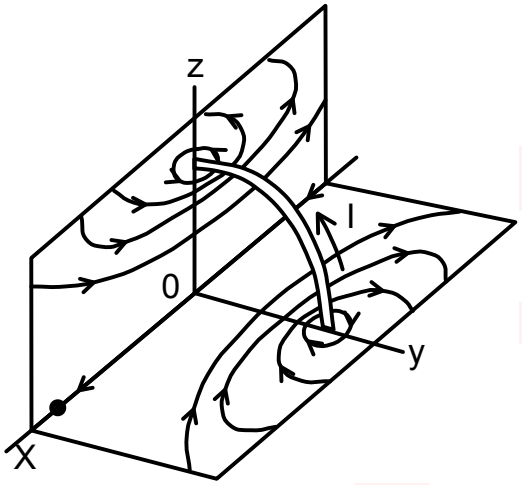

(C)

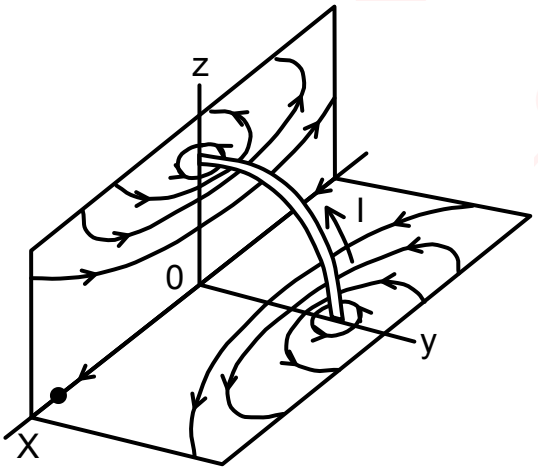

(D)

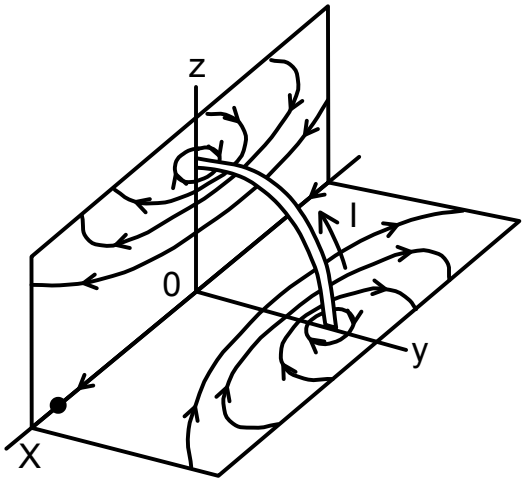

Solution · Q78 **Answer: (A)**

Current flows from the y-axis end of the wire to its z-axis end.

By the right-hand thumb rule:

XY plane: current crosses it upwards, so seen from above the lines circle the wire anticlockwise.

XZ plane: current crosses it towards the –y side, so on the face seen the lines circle the wire clockwise.

Both give a field along +x near the origin.

∴ only figure (A) shows both correctly.

IAPT answer: (A) | **Zigyan answer:** (A)

79. A particle experiences constant acceleration for 20 s after starting from rest. If it travels a distance S_1 in the first 10 s and distance S_2 in the next 10 s, the relation between S_1 and S_2 is:

(A) $S_2 = 3S_1$ (B) $S_1 = 3S_2$ (C) $S_2 = 2S_1$ (D) $S_1 = 10S_2$

Solution · Q79 **Answer: (A)**

Starting from rest, distance in the first 10 s:

$$S_1 = \frac{1}{2}a(10)^2 = 50a$$

Distance in 20 s:

$$S_1 + S_2 = \frac{1}{2}a(20)^2 = 200a$$

$$\Rightarrow S_2 = 200a - 50a = 150a$$

$$\Rightarrow S_2 = 3S_1$$

IAPT answer: (A) | **Zigyan answer:** (A)

80. A sound wave is produced by a vibrating metallic string stretched between its ends. Four statements are given below. Some of them are correct.

(P) Sound wave is produced inside the string.

(Q) Sound wave in the string is transverse.

(R) Wavelength of the sound wave in surrounding air is equal to the wavelength of the transverse wave on the string.

(S) Loudness of sound is proportional to the square of the amplitude of the vibrating string.

Choose the correct option.

(A) P (B) R and S (C) P and Q (D) S

Solution · Q80 **Answer: (D)**

(P) The sound wave is produced in the surrounding air by the vibrating string. ∴ false.

(Q) The transverse wave on the string is not the sound wave; sound in air is longitudinal. ∴ false.

(R) The frequency is the same, but the wave speeds differ, so the wavelengths are generally different. ∴ false.

(S) Loudness is taken as proportional to the square of the amplitude of the vibrating source. ∴ true.

IAPT answer: (D) | **Zigyan answer:** (D)

Given in the question paper

NOTE: FOLLOWING INFORMATION MAY BE USEFUL TO YOU:

1. Trigonometric ratios are defined for angles greater than 90º also.

2. The following identities may be useful:

$$\sin(180^o - \theta) = \sin\theta; \quad \cos(180^o - \theta) = -\cos\theta$$

3. Periodic Table of elements

PERIODIC TABLE OF THE ELEMENTS

1																	2
H																	He
1.008																	4.00
3	4											5	6	7	8	9	10
Li	Be											B	C	N	O	F	Ne
6.94	9.01											10.81	12.01	14.01	16.00	19.00	20.18
11	12											13	14	15	16	17	18
Na	Mg											Al	Si	P	S	Cl	Ar
22.99	24.30											26.98	28.09	30.97	32.06	35.45	39.95
19	20	21	22	23	24	25	26	27	28	29	30	31	32	33	34	35	36
K	Ca	Sc	Ti	V	Cr	Mn	Fe	Co	Ni	Cu	Zn	Ga	Ge	As	Se	Br	Kr
39.10	40.08	44.96	47.90	50.94	52.00	54.94	55.85	58.93	58.69	63.55	65.39	69.72	72.59	74.92	78.96	79.90	83.80
37	38	39	40	41	42	43	44	45	46	47	48	49	50	51	52	53	54
Rb	Sr	Y	Zr	Nb	Mo	Tc	Ru	Rh	Pd	Ag	Cd	In	Sn	Sb	Te	I	Xe
85.47	87.62	88.91	91.22	92.91	95.94	(98)	101.1	102.91	106.42	107.87	112.41	114.82	118.71	121.75	127.60	126.91	131.29
55	56	57	72	73	74	75	76	77	78	79	80	81	82	83	84	85	86
Cs	Ba	*La	Hf	Ta	W	Re	Os	Ir	Pt	Au	Hg	Tl	Pb	Bi	Po	At	Rn
132.91	137.33	138.91	178.49	180.95	183.85	186.21	190.2	192.2	195.08	196.97	200.59	204.38	207.2	208.98	(209)	(210)	(222)
87	88	89	104	105	106	107	108	109	110	111							
Fr	Ra	†Ac	Rf	Db	Sg	Bh	Hs	Mt	Ds	Rg							
(223)	226.02	227.03	(261)	(262)	(266)	(264)	(277)	(268)	(271)	(272)							

*Lanthanide Series	58	59	60	61	62	63	64	65	66	67	68	69	70	71
	Ce	Pr	Nd	Pm	Sm	Eu	Gd	Tb	Dy	Ho	Er	Tm	Yb	Lu
	140.12	140.91	144.24	(145)	150.4	151.97	157.25	158.93	162.50	164.93	167.26	168.93	173.04	174.97
†Actinide Series	90	91	92	93	94	95	96	97	98	99	100	101	102	103
	Th	Pa	U	Np	Pu	Am	Cm	Bk	Cf	Es	Fm	Md	No	Lr
	232.04	231.04	238.03	(237)	(244)	(243)	(247)	(247)	(251)	(252)	(257)	(258)	(259)	(262)

ANSWER KEY

NSEJS 2019 · PAPER CODE 51

80
QUESTIONS · 240 MARKS

IAPT final answer key for paper code 51. ★ marks an answer given as per Zigyan.

1	(D)	2	(B)	3	(C)	4	(C)	5	(D)
6	(A)	7	(D)	8	(D)	9	(A)	10	(B)
11	(A)	12	(A)	13	(A)	14	(A)	15	(A)
16	(C)	17	(A)	18	(D)	19	(C)	20	(B)
21	(C)	22	(B)★	23	(B)	24	(D)	25	(A)★
26	(B)	27	(C)	28	(D)	29	(D)	30	(C)
31	(D)	32	(B)	33	(C)	34	(D)	35	(B)★
36	(A)★	37	(C)	38	(B)	39	(C)	40	(A)
41	(B)	42	(A)	43	(C)	44	(C)	45	(B)
46	(B)	47	(C)	48	(D)	49	(C)	50	(B)
51	(A)	52	(A)	53	(A)	54	–★	55	(B)
56	(A)	57	(C)	58	(C)	59	(D)	60	(A)★
61	(C)	62	(A)	63	(B)	64	(D)	65	(C)
66	(B)	67	(B)	68	(B)	69	(A)	70	(C)
71	(D)	72	(A)	73	(B)	74	(C)	75	(C)
76	(C)	77	(A)	78	(A)	79	(A)	80	(D)

★ Answers as per Zigyan

- **Q22** — As per Zigyan: (B); IAPT key (B).
- **Q25** — As per Zigyan: (A); IAPT key (B).
- **Q35** — As per Zigyan: (B); IAPT key (B) or (D).
- **Q36** — As per Zigyan: (A); IAPT key (D).
- **Q54** — As per Zigyan: no option is correct; dropped by IAPT.
- **Q60** — As per Zigyan: (A); IAPT key (A).

zigyan

OLYMPIADS · 2026

Olympiad results



TOP ACHIEVEMENT · CHEMISTRY

Qualified the Chemistry Olympiad twice, and selected for the HBCSE camp.

Saksham Bishnoi reached the national stage of the Chemistry Olympiad in two consecutive years and was selected for the Orientation-cum-Selection Camp at HBCSE, Mumbai. 4 Years Classroom - the same student who took AIR 168 in JEE Advanced 2026.

Qualified twice | HBCSE selection camp | Only student from Faridabad

Above MAS means above the **Minimum Admissible Score**: clearing it puts a student in the national band for their subject. It is a real threshold, not a participation marker.

CHEMISTRY · ABOVE MAS



Sulokya Bibhuty
Class XII
3 Years Classroom
Above MAS



Anay Gupta
Class XI
3 Years Classroom
Above MAS



Akshat Khator
Class XI
3 Years Classroom
Above MAS



Harshit Goyal
Class XII
4 Years Classroom
Above MAS



Hardik Sharma
Class XI
3 Years Classroom
Above MAS



Aarush Kumar
Class XII
1 Year Classroom
Above MAS

PHYSICS · ASTRONOMY · MATHEMATICS

PHYSICS



Sulokya Bibhuty
Class XII
3 Years Classroom
Above MAS

PHYSICS



Saksham Bishnoi
Class XII
4 Years Classroom
Above MAS

ASTRONOMY



Sulokya Bibhuty
Class XI
3 Years Classroom
Above MAS

MATHEMATICS · IOQM



Priyanshi
Class XI
4 Years Classroom
IOQM Qualifier

OLYMPIADS WE PREPARE STUDENTS FOR

NSEP	NSEC	NSEB	NSEA	IOQM	NSEJS
Physics	Chemistry	Biology	Astronomy	Mathematics	Class X and below

The olympiad pathway starts in Class 8.

NSEJS is open to Class 10 and below - the habit of staying with one hard problem is the one JEE Advanced rewards.

Zigyan Eduvision Pvt. Ltd. · SCO No. 107, Sector 16, Faridabad 121002
0129-4048800 · +91 92115 38800 · info@zigyan.com

zigyan

RESULTS · 2021 – 2026

Our toppers, year by year

40
JEE Advanced selections in 6 years

AIR 168
best rank — Saksham Bishnoi, 2026

16 of 35
students selected, JEE Advanced 2026

14 of 35
above 98 percentile, JEE Main 2026

JEE ADVANCED SELECTIONS PER YEAR

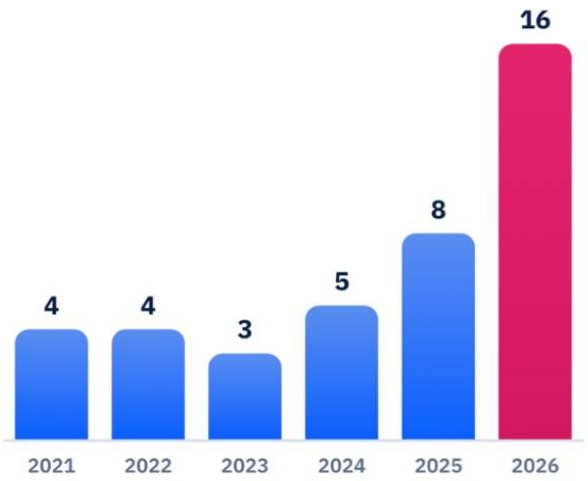

BEST RANK EACH YEAR

YEAR	JEE ADVANCED	JEE MAIN
2026	**Saksham Bishnoi** AIR 168 · 4 Years Classroom	**Saksham Bishnoi** AIR 811 · 99.95 %ile
2025	**Chakshu** AIR 4,233 · 2 Years Classroom	**Chakshu** AIR 8,538 · 99.44 %ile
2024	**Harshit** AIR 777 · 2 Years Classroom	**Harshit** AIR 1,473 · 99.91 %ile
2023	**Aditya Jain** AIR 2,373 · 2 Years Classroom	**Aditya Jain** AIR 2,503 · 99.79 %ile
2022	**Rachit Sharma** AIR 698 · 1 Year Classroom	**Rachit Sharma** AIR 1,016 · 99.90 %ile
2021	**Sparsh Mittal** AIR 2,237 · 1 Year Classroom	**Sparsh Mittal** AIR 1,562

JEE ADVANCED 2026 — THIRTEEN NAMED SELECTIONS



Saksham Bishnoi
AIR 168
4 Years Classroom



Sulokya Bibhuty
AIR 1,315
3 Years Classroom



Aarush
AIR 2,699
1 Year Classroom



Manishka
AIR 2,869
4 Years Classroom



Oojit Kumar
AIR 5,765
4 Years Classroom



Harshit Goyal
AIR 6,407
4 Years Classroom



Pranab Sharma
AIR 6,750
3 Years Classroom



Aditya Dhar
AIR 15,183
3 Years Classroom



Arpit Anshuman
AIR 19,308
4 Years Classroom



Lokesh
AIR 22,857
3 Years Classroom



Arjun
AIR 24,674
3 Years Classroom



Sanyam Gulyani
AIR 25,123
1 Year Classroom



Saket
AIR 27,628
3 Years Classroom

Sixteen students of the 2026 batch were selected in JEE Advanced; the thirteen above are named with their All India Rank.

JEE MAIN 2026 — TOP SIX, WITH PERCENTILE



Saksham Bishnoi
AIR 811
99.95 %ile
4 Years Classroom



Sulokya Bibhuty
AIR 1,095
99.94 %ile
3 Years Classroom



Harshit Goyal
AIR 2,662
99.83 %ile
4 Years Classroom



Manishka
AIR 4,817
99.70 %ile
4 Years Classroom



Oojit Kumar
AIR 5,040
99.69 %ile
4 Years Classroom



Aarush
AIR 5,276
99.67 %ile
1 Year Classroom

14 of the 35 students in the 2026 batch scored above the 98th percentile in JEE Main.

Zigyan Eduvision Pvt. Ltd. · SCO No. 107, Sector 16, Faridabad 121002
0129-4048800 · +91 92115 38800 · info@zigyan.com