zigyan

PREVIOUS YEAR PAPER · 2021-22

OLYMPIAD · STAGE I

IOQJS

Indian Olympiad Qualifier in Junior Science (Part I)

2021-22

Question paper with official answer key

33	126	75 min	51
Questions	Maximum marks	Time	Paper code

Question paper and official answer key: Indian Association of Physics Teachers (IAPT), IOQJS 2021-22, paper code 51.
Solutions and notes: Zigyan. This booklet is not an IAPT publication.

Prepare for the Olympiads with Zigyan

www.zigyan.com

zigyan

SCO No. 107, Sector 16, Faridabad, Haryana 121002
0129-4048800 · +91 92115 38800 · info@zigyan.com

zigyan

JEE 2026 RESULTS

OUR TOPPERS

When talent meets the right guidance.

Saksham Bishnoi and Sulokya Bibhuty - our JEE 2026 toppers from Zigyan, Sector 16 - with the programme they took and the rank they earned.



Rahul Kaushik Sir
Founder & Director, Zigyan Eduvision
23 years of teaching



Saksham Bishnoi

4 YEARS CLASSROOM

JEE ADVANCED 2026	JEE MAIN 2026
AIR 168	AIR 811
	99.95 percentile



Sulokya Bibhuty

3 YEARS CLASSROOM

JEE ADVANCED 2026	JEE MAIN 2026
AIR 1,315	AIR 1,095
	99.94 percentile

OLYMPIAD RESULTS

Above the Minimum Admissible Score - the national band for the subject

CHEMISTRY

- Sulokya Bibhuty — 3 Years Classroom
- Anay Gupta — 3 Years Classroom
- Akshat Khator — 3 Years Classroom
- Harshit Goyal — 4 Years Classroom
- Hardik Sharma — 3 Years Classroom
- Aarush Kumar — 1 Year Classroom

PHYSICS

- Sulokya Bibhuty — 3 Years Classroom
- Saksham Bishnoi — 4 Years Classroom

ASTRONOMY

- Sulokya Bibhuty — 3 Years Classroom

MATHEMATICS (IOQM)

- Priyanshi — 4 Years Classroom

Saksham Bishnoi qualified the Chemistry Olympiad twice and was selected for the Orientation-cum-Selection Camp at HBCSE, Mumbai.

16 selections	16 of 35	AIR 168
in JEE Advanced 2026	students of the batch selected	best JEE Advanced rank

Start where they started.

Register for ZEST - ₹200 · www.zigyan.com/scholarship/zest

+91 92115 38800
info@zigyan.com

Given in the question paper

Physical constants you may need....

Mass of electron $m_e = 9.10\times10^{-31} kg$	Magnitude of charge on electron $e = 1.60\times10^{-19} C$
Mass of proton $m_p = 1.67\times10^{-27} kg$	Planck's constant $h = 6.625\times10^{-34} Js$
Acceleration due to gravity g = 9.81 ms^{-2}	Density of seawater at $\rho = 1.03\times10^{3} kg\,m^{-3}$
Universal gravitational constant $G = 6.67\times10^{-11} Nm^2Kg^{-2}$	$(1+x)^n \approx 1+nx,\ \text{if}\ \lvert x\rvert << 1$
Universal gas constant $R = 8.31\ Jmol^{-1}\ K^{-1}$	$1eV = 1.6\times10^{-19} J$
Boltzmann constant $k = 1.38\times10^{-23} J\,K^{-1}$	$\sin(A-B) = \sin A\cos B - \cos A\sin B$
Avogadro's constant $A = 6.02\times10^{23}\ mol^{-1}$	$E = mc^2$, It's an equation which gives mass and energy equivalence.
Speed of light in free space $c = 3.0\times10^{8}\ ms^{-1}$	One unit of electric power = 1kWh

PART A-1 · ONE CORRECT OPTION

Q. 1 – 24 · +3 for a correct answer, –1 for a wrong one

1. Which of the following is not a function of mature RBCs?

(A) Help in classifying blood in different blood groups
(B) Help in transport of gases
(C) Synthesis of immunoglobulins
(D) Help in maintaining acid base balance in the body

2. In which of the following classes of vertebrates there are groups of animals without limbs?

(A) Fish, reptiles and mammals
(B) Reptiles only
(C) Reptiles and Amphibians
(D) Amphibians only

3. Which of the following groups have only one pair of wings?

(A) Honey bee, beetle, ant
(B) Butterfly, housefly, fruitfly
(C) Dragonfly, butterfly, fruitfly
(D) Housefly, fruitfly, mosquito

4. During an expedition to planet 'Imagitica', scientists analysed the genetic material of the organisms found there and noted the following features:

i. Amount of purines and pyrimidines is unequal

ii. Absence of thymine

iii. Unstable genetic material, with high frequency of mutation

iv. Rapid degradation at pH above 12

From the above data, what genetic material might the Imagitica inhabitants contain?

(A) ssDNA (B) dsDNA (C) ssRNA (D) dsRNA

5. Which of the following is most likely to show aerenchyma?

(A) Leaf base of mango (B) Petiole of water hyacinth

(C) Seta of moss (D) Stem of *Opuntia*

6. Given below are three statements about bryophytes:

i. Bryophytes are lower plants with plant body differentiated into root, stem and leaves.

ii. Bryophytes are devoid of xylem and phloem.

iii. Bryophytes require water for completion of their life cycle.

Which of the above statement/s is/are true with respect to bryophytes?

(A) ii only (B) i and ii (C) i and iii (D) ii and iii

7. Carbon fixation in most of the succulent plants takes place through which pathway?

(A) Calvin cycle (B) Glycolate pathway

(C) Crassulacean acid metabolism pathway (D) Hatch-Slack pathway

8. If a flower is large, wide-mouthed, white, showing anthesis after sunset, and emitting fruity or musky fragrance, it is most likely to be pollinated by:

(A) Birds (B) Bats (C) Insects (D) Baboons

9. Coal is a common fossil fuel. It contains 0.2 to 5.0 percent sulphur which on burning produces a gas responsible for acid rain. The number of atoms in one mole of this gas is-

(A) 6.02×10^{23} (B) 1.81×10^{23} (C) 1.81×10^{24} (D) 1.21×10^{24}

10. The stomach fluid in human contains HCl, KCl and NaCl. The stomach fluid is highly acidic and plays an important role in the digestion of food as well as killing of bacteria. The increased acidity may lead to abdominal pain, nausea, bloating, and heartburn. Such a patient is prescribed antacid tablet which mainly contains aluminium hydroxide (Mol. Wt. 78). If the concentrations of HCl, KCl and NaCl are 0.01M each and the stomach fluid volume is 2 litre, the amount of $Al(OH)_3$ required to neutralize the fluid will be-

(A) 0.52 g (B) 1.08 g (C) 0.81 g (D) 2.16 g

11. A 0.500 g mixture of calcium carbonate and calcium oxide was strongly heated to produce a non-combustible gas. If the weight of the residue obtained on heating is found to be 0.434 g, the percentage of calcium oxide in the mixture is-

(A) 70% (B) 30% (C) 35% (D) 60%

12. Arrange the following in the increasing order of their metallic character Na, C, O, Li, Be

(A) C < O < Na < Li < Be
(B) O < C < Be < Na < Li
(C) O < C < Be < Li < Na
(D) C < O < Be < Li < Na

13. A 50 mL of 0.1 M acetic acid solution is taken in a beaker and two wires are dipped in it as shown in following figure.

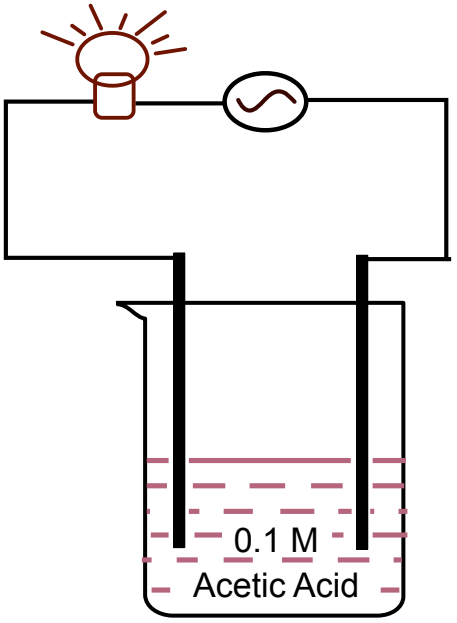

When electric supply is switched on, the bulb glows. To this solution, distilled water is added slowly till the volume doubles. During the addition of water, the intensity of the bulb-

(A) remains unchanged
(B) goes on decreasing
(C) goes on increasing
(D) suddenly becomes zero

14. A compound X when heated with NaOH solution produces a pungent gas that turns red litmus blue. When an aqueous solution of X is treated with $AgNO_3$ solution, a white precipitate Y is obtained which on keeping in sunlight turns grey liberating pale yellowish green gas. The aqueous solution of compound X is

(A) neutral
(B) slightly acidic
(C) slightly alkaline
(D) strongly acidic

15. Equal masses of two gases among N_2, NO, O_2, CO, CO_2 and SO_2 occupy same volume at STP. These two gases are:

(A) N_2 and O_2
(B) CO and NO
(C) SO_2 and CO_2
(D) N_2 and CO

16. When a solution and the pure solvent are separated by a semipermeable membrane, the solution exerts a pressure on the membrane called as osmotic pressure. The osmotic pressure increases with increase in number of particles (ions or molecules) in the solution. If 10 millimoles of each of the sulphate salts of sodium, magnesium and aluminium are dissolved in 1.0 litre of water in three different beakers labelled as P, Q and R respectively, the osmotic pressure follows the order-

(A) P < Q < R
(B) Q < P < R
(C) P > Q > R
(D) P > R > Q

17. The axes of a coordinate system S_2 are inclined at an angle θ to those of another coordinate system S_1. The origins of both the systems are coinciding. A particle P_1 at rest in system S_1, starts from point (−2, 0) and travels along positive direction of X_1 axis with uniform acceleration of 1.25 m/s^2 for 4 s and stops. In system S_2, particle P_2, starts from rest from the origin and travels for 2 s along positive direction of X_2 axis with uniform acceleration 5 m/s^2 and stops. If the final distance between P_1 and P_2 is 6 m, then the angle between $+Y_1$ axis and $+X_2$ axis is

(A) 36.8° (B) 53.2° (C) 106.8° (D) 126.8°

18. The variation of a certain physical parameter Z with variable u is given by the relation $Z = A\left(\frac{R}{R+u}\right)^3$, where R and A are constants and the maximum value of u ≪ R. Then to find R, a student plots a graph of variation of Z (Y axis) against u (X axis). The graph is a

(A) straight line passing through origin and slope = $\frac{R}{3}$

(B) straight line with intercept $\frac{3A}{2}$ and slope = $-\frac{R}{3A}$

(C) straight line with intercept A and slope = $-\frac{3A}{R}$

(D) straight line with intercept $-\frac{A}{2}$ and slope = − 3R

19. A submarine S_1 is parked at a depth of 200 m in an ocean on earth. Assume oceans exist on Mars. At about what depth a submarine S_2 has to be parked in an ocean on Mars so that S_2 will experience same pressure as that of S_1? Acceleration due to gravity on Mars is 3.7 m/s^2. (Assume that sea water density on Earth and Mars is same, $\rho = 1.03 \times 10^3$ kg / m^3)

(A) 158 m (B) 435 m (C) 530 m (D) 616 m

20. In an oscillating system, damping results in dissipation of the stored energy. The following figure shows the variation of displacement x with time t for an oscillating system. Which of the following statements best describes this physical phenomenon.

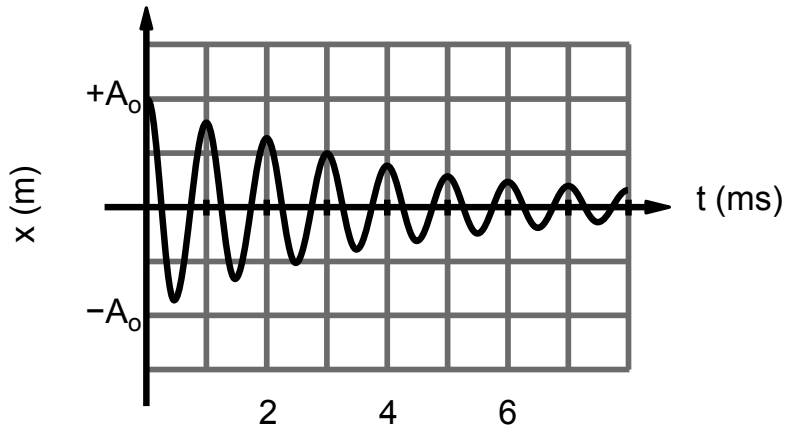

(A) Oscillatory motion of an object without damping

(B) Oscillatory motion of an object with damping such that time measurement was started when the system was at the mean position.

(C) Oscillatory motion of an object with damping with decreasing time period.

(D) Oscillatory motion of an object with damping such that time measurement was started when the system had maximum potential energy.

21. In the adjacent circuit, the galvanometer G does not show any deflection. If R = 2 Ω, the current drawn from the cell is

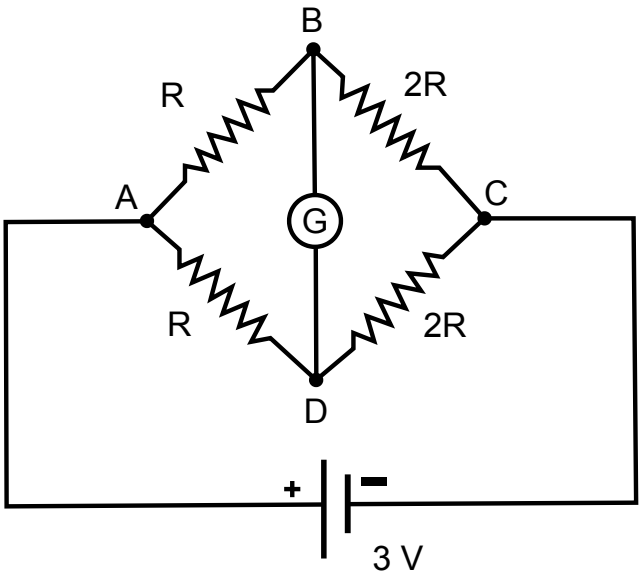

(A) 1 A

(B) 9 A

(C) 4 A

(D) $\frac{9}{4}$ A

22. 'Gear' is a mechanical system used to transfer mechanical and rotary motion from one mechanical system to another. As shown in the figure below the driving wheel A drives the driven wheel B without slipping and thus forms the gear system. The wheel A has 16 teeth and B has 24 teeth. Wheel B has a projection (shown by white ring in Fig. 1 and also in the side view of Fig. 2) of radius $\frac{14}{11}$ cm.

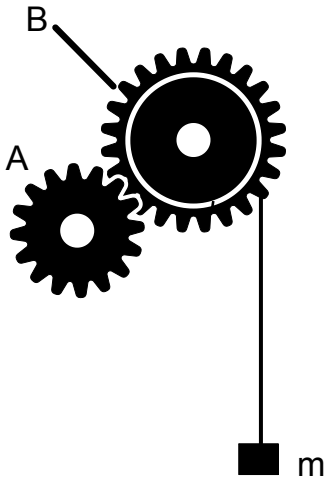

Fig. 1

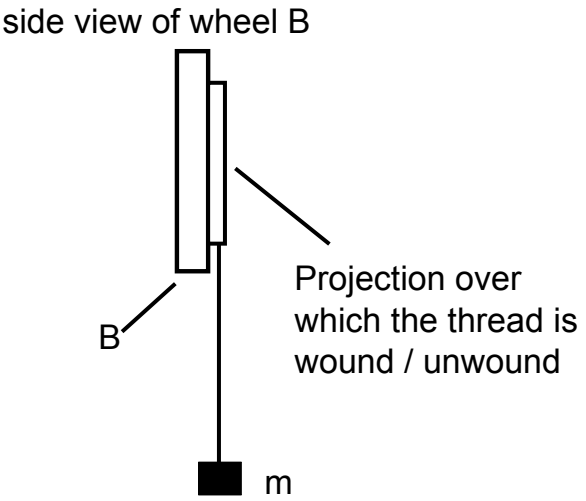

Fig. 2

A long massless, inextensible string can be wound / unwound over this circular projection. A mass m is attached to the free end of this long string. If the wheel A makes 6 revolutions per second in the clockwise direction, without slipping, then in $\frac{1}{2}$ second the potential energy of the mass m in CGS unit

(A) increases by 32mg
(B) decreases by 32mg
(C) increases by 16mg
(D) decreases by 16mg

23. Canopus is the second brightest star in the night sky. It is about 300 light years away. The energy is produced inside the star through nuclear reactions. If we receive 5.0×10^{-8} W/m^2 energy from Canopus, how much mass does it lose per second?

(A) 1.70×10^{-6} kg
(B) 1.91×10^{9} kg
(C) 5.62×10^{13} kg
(D) 6.34×10^{31} kg

24. An average human adult radiates about 100 W energy mainly in infra-red region of the electromagnetic spectrum. 50 persons are sitting in a hall with an air conditioning system which is 50% efficient. How much electricity must be used to maintain temperature of the hall at 25°C for 4 hours?

(A) 5 units
(B) 10 units
(C) 20 units
(D) 40 units

PART A-2 · ONE OR MORE CORRECT OPTIONS

Q. 25 – 33 · 6 marks only if all correct options are marked · no negative marking

25. Given below are four statements about viruses. Which of the following statement/s is/are incorrect?

(A) All known viruses contain RNA as the genetic material.

(B) During viral multiplication, a complementary DNA is produced in riboviruses.

(C) Viruses are the smallest, freely living cells found on the planet.

(D) DNA containing viruses are more susceptible to mutations when compared to RNA containing viruses and hence show a very rapid evolution.

26. During a race, Ramesh was thrown off the horse back and suffered an injury in the front part of head. Upon thorough examination, Ramesh was found to have injury to the front part of the head. Which of the following can be the possible outcome/s of this injury?

(A) Trouble in speaking properly

(B) Inability to smell

(C) Inability to walk on a narrow path

(D) Inability to maintain blood pressure

27. Which of the following molecules are primarily responsible for structural support and motility?

(A) Actin (B) Tubulin alpha (C) Lamins (D) Desmin

28. The types of bonding found in dry ice is/are

(A) Covalent

(B) Ionic

(C) Metallic

(D) Vander Waal forces

29. The compound/s that raise/s the temperature of water (from room temperature) on dissolving in it is/are-

(A) Ammonium chloride

(B) Potassium hydroxide

(C) Glucose

(D) Conc. HCl

30. Soaps and detergents are common agents used in laundry industry. They are long chain hydrocarbons with ionic terminals of cationic or anionic nature. A 1% (w/v) soap solution X and 1% (w/v) detergent solution Y were prepared in distilled water. Each of the solutions was divided in two equal parts and labelled as X_1, X_2, Y_1 and Y_2. 1 g NaCl was added to X_1 and Y_1 each while 1 g $CaCl_2$ was added to X_2 and Y_2 each. Which of the following observations is/are correct?

(A) X_1 shows slimy precipitate

(B) X_2 shows slimy precipitate

(C) Y_1 shows slimy precipitate

(D) Y_2 shows slimy precipitate

31. According to Einstein's theory, light can be assumed to be in the form of a large number of discrete energy packets called 'photons'. In case of light of frequency v, each photon carries energy E = hv. In a certain surgical procedure a surgeon uses LASER beam of wavelength 650 nm in pulses of 30.0 ms duration. The average power of each pulse is 0.6 W. Here h is Planck's constant. Then

(A) the frequency of this LASER photon is 4.6×10^{14} Hz

(B) the energy in each pulse is 1.1×10^{17} eV

(C) energy of one photon is 3.1×10^{-19} J

(D) number of photons in each pulse is 5.9×10^{16}

32. In the following circuit, $R_1 = 6\ \Omega$, $R_2 = 12\ \Omega$, $V = 16$ V. The currents I_1 and I_2 flow through the resistances R_1 and R_2 respectively

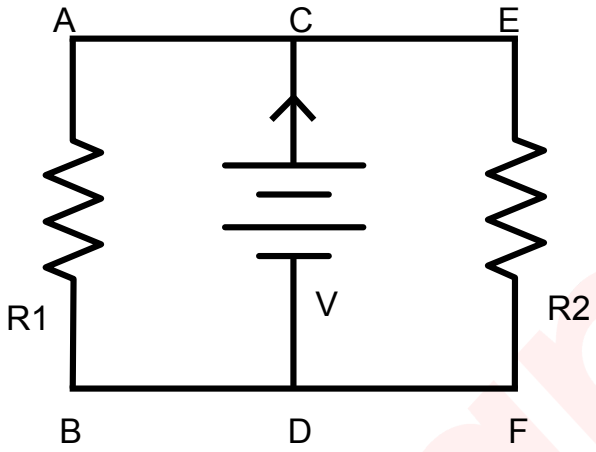

(A) power generated across R_1 is 42.6 watt

(B) the ratio of $\frac{I_1}{I_2} = 2$

(C) total current drawn from the cell is 4 ampere

(D) as $R_2 = 2\ R_1$, the voltage across R_2 will be twice the voltage across R_1

33. A glass plate of uniform thickness t and refractive index μ is as shown in the diagram. AB is the incident ray and FG is the emergent ray. The angles of incidence and refraction are i and r respectively. The perpendicular distance FC = x between the incident and the emergent rays is called the lateral shift. Then

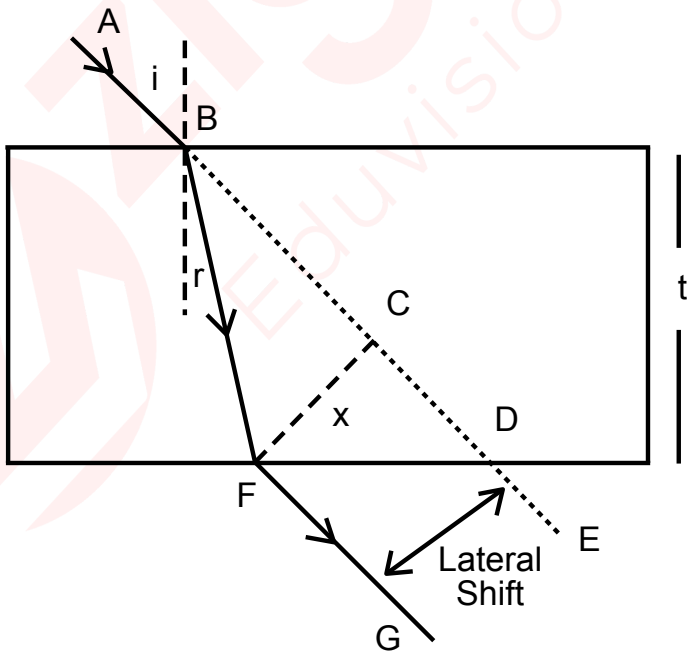

(A) $x = t\left(\sin i - \frac{\cos i \sin i \sin r}{\cos r}\right)$

(B) x depends on refractive index μ

(C) x is independent of the wavelength λ of light

(D) Maximum value of x = t when i is close to 90°

ANSWER KEY

IOQJS 2021-22 · PAPER CODE 51

33
QUESTIONS · 126 MARKS

IAPT final answer key for paper code 51. ★ marks an answer given as per Zigyan.

1	(C)	2	(C)	3	(D)	4	(C)	5	(B)
6	(D)	7	(C)	8	(B)	9	(C)	10	(A)
11	(A)	12	(C)	13	(C)	14	(B)	15	(D)
16	(B)	17	(B)★	18	(C)★	19	(C)	20	(D)
21	(A)	22	(C)	23	(C)	24	(D)	25	(A), (C), (D)★
26	(A), (B), (C)★	27	(A), (B)	28	(A), (D)	29	(B), (D)	30	(B)
31	(A), (B), (C), (D)	32	(A), (B), (C)	33	(A), (B), (D)				

★ Answers as per Zigyan

- **Q17** — As per Zigyan: (B); IAPT key (B) or (D).
- **Q18** — As per Zigyan: (C); dropped by IAPT.
- **Q25** — As per Zigyan: (A), (C), (D); IAPT key (A), (C), (D).
- **Q26** — As per Zigyan: (A), (B), (C); IAPT key (A), (B), (C).

zigyan

OLYMPIADS · 2026

Olympiad results



TOP ACHIEVEMENT · CHEMISTRY

Qualified the Chemistry Olympiad twice, and selected for the HBCSE camp.

Saksham Bishnoi reached the national stage of the Chemistry Olympiad in two consecutive years and was selected for the Orientation-cum-Selection Camp at HBCSE, Mumbai. 4 Years Classroom - the same student who took AIR 168 in JEE Advanced 2026.

Qualified twice | HBCSE selection camp | Only student from Faridabad

Above MAS means above the **Minimum Admissible Score**: clearing it puts a student in the national band for their subject. It is a real threshold, not a participation marker.

CHEMISTRY · ABOVE MAS



Sulokya Bibhuty
Class XII
3 Years Classroom
Above MAS



Anay Gupta
Class XI
3 Years Classroom
Above MAS



Akshat Khator
Class XI
3 Years Classroom
Above MAS



Harshit Goyal
Class XII
4 Years Classroom
Above MAS



Hardik Sharma
Class XI
3 Years Classroom
Above MAS



Aarush Kumar
Class XII
1 Year Classroom
Above MAS

PHYSICS · ASTRONOMY · MATHEMATICS

PHYSICS



Sulokya Bibhuty
Class XII
3 Years Classroom
Above MAS

PHYSICS



Saksham Bishnoi
Class XII
4 Years Classroom
Above MAS

ASTRONOMY



Sulokya Bibhuty
Class XI
3 Years Classroom
Above MAS

MATHEMATICS · IOQM



Priyanshi
Class XI
4 Years Classroom
IOQM Qualifier

OLYMPIADS WE PREPARE STUDENTS FOR

NSEP	NSEC	NSEB	NSEA	IOQM	NSEJS
Physics	Chemistry	Biology	Astronomy	Mathematics	Class X and below

The olympiad pathway starts in Class 8.

NSEJS is open to Class 10 and below - the habit of staying with one hard problem is the one JEE Advanced rewards.

Zigyan Eduvision Pvt. Ltd. · SCO No. 107, Sector 16, Faridabad 121002
0129-4048800 · +91 92115 38800 · info@zigyan.com

zigyan

RESULTS · 2021 – 2026

Our toppers, year by year

40
JEE Advanced selections in 6 years

AIR 168
best rank — Saksham Bishnoi, 2026

16 of 35
students selected, JEE Advanced 2026

14 of 35
above 98 percentile, JEE Main 2026

JEE ADVANCED SELECTIONS PER YEAR

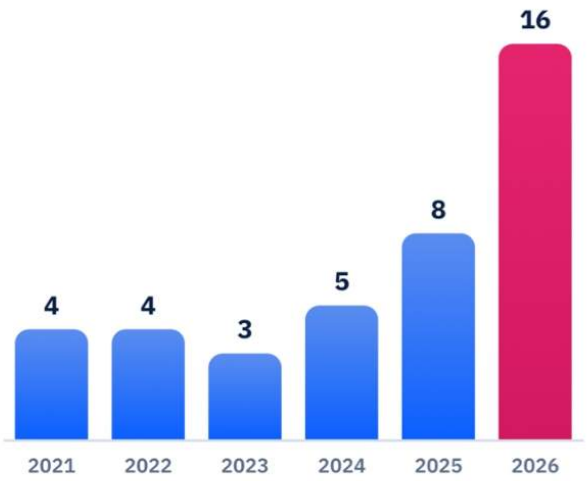

BEST RANK EACH YEAR

YEAR	JEE ADVANCED	JEE MAIN
2026	**Saksham Bishnoi** AIR 168 · 4 Years Classroom	**Saksham Bishnoi** AIR 811 · 99.95 %ile
2025	**Chakshu** AIR 4,233 · 2 Years Classroom	**Chakshu** AIR 8,538 · 99.44 %ile
2024	**Harshit** AIR 777 · 2 Years Classroom	**Harshit** AIR 1,473 · 99.91 %ile
2023	**Aditya Jain** AIR 2,373 · 2 Years Classroom	**Aditya Jain** AIR 2,503 · 99.79 %ile
2022	**Rachit Sharma** AIR 698 · 1 Year Classroom	**Rachit Sharma** AIR 1,016 · 99.90 %ile
2021	**Sparsh Mittal** AIR 2,237 · 1 Year Classroom	**Sparsh Mittal** AIR 1,562

JEE ADVANCED 2026 — THIRTEEN NAMED SELECTIONS



Saksham Bishnoi
AIR 168
4 Years Classroom



Sulokya Bibhuty
AIR 1,315
3 Years Classroom



Aarush
AIR 2,699
1 Year Classroom



Manishka
AIR 2,869
4 Years Classroom



Oojit Kumar
AIR 5,765
4 Years Classroom



Harshit Goyal
AIR 6,407
4 Years Classroom



Pranab Sharma
AIR 6,750
3 Years Classroom



Aditya Dhar
AIR 15,183
3 Years Classroom



Arpit Anshuman
AIR 19,308
4 Years Classroom



Lokesh
AIR 22,857
3 Years Classroom



Arjun
AIR 24,674
3 Years Classroom



Sanyam Gulyani
AIR 25,123
1 Year Classroom



Saket
AIR 27,628
3 Years Classroom

Sixteen students of the 2026 batch were selected in JEE Advanced; the thirteen above are named with their All India Rank.

JEE MAIN 2026 — TOP SIX, WITH PERCENTILE



Saksham Bishnoi
AIR 811
99.95 %ile
4 Years Classroom



Sulokya Bibhuty
AIR 1,095
99.94 %ile
3 Years Classroom



Harshit Goyal
AIR 2,662
99.83 %ile
4 Years Classroom



Manishka
AIR 4,817
99.70 %ile
4 Years Classroom



Oojit Kumar
AIR 5,040
99.69 %ile
4 Years Classroom



Aarush
AIR 5,276
99.67 %ile
1 Year Classroom

14 of the 35 students in the 2026 batch scored above the 98th percentile in JEE Main.

Zigyan Eduvision Pvt. Ltd. · SCO No. 107, Sector 16, Faridabad 121002
0129-4048800 · +91 92115 38800 · info@zigyan.com