zigyan

PREVIOUS YEAR PAPER · 2021-22

OLYMPIAD · STAGE I

IOQJS

Indian Olympiad Qualifier in Junior Science (Part I)

2021-22

Question paper, answer key and Zigyan solutions

33	126	75 min	51
Questions	Maximum marks	Time	Paper code

Question paper and official answer key: Indian Association of Physics Teachers (IAPT), IOQJS 2021-22, paper code 51.
Solutions and notes: Zigyan. This booklet is not an IAPT publication.

Prepare for the Olympiads with Zigyan

www.zigyan.com

zigyan

SCO No. 107, Sector 16, Faridabad, Haryana 121002
0129-4048800 · +91 92115 38800 · info@zigyan.com

zigyan

JEE 2026 RESULTS

OUR TOPPERS

When talent meets the right guidance.

Saksham Bishnoi and Sulokya Bibhuty - our JEE 2026 toppers from Zigyan, Sector 16 - with the programme they took and the rank they earned.



Rahul Kaushik Sir
Founder & Director, Zigyan Eduvision
23 years of teaching



Saksham Bishnoi

4 YEARS CLASSROOM

JEE ADVANCED 2026	JEE MAIN 2026
AIR 168	AIR 811
	99.95 percentile



Sulokya Bibhuty

3 YEARS CLASSROOM

JEE ADVANCED 2026	JEE MAIN 2026
AIR 1,315	AIR 1,095
	99.94 percentile

OLYMPIAD RESULTS

Above the Minimum Admissible Score - the national band for the subject

CHEMISTRY

- Sulokya Bibhuty — 3 Years Classroom
- Anay Gupta — 3 Years Classroom
- Akshat Khator — 3 Years Classroom
- Harshit Goyal — 4 Years Classroom
- Hardik Sharma — 3 Years Classroom
- Aarush Kumar — 1 Year Classroom

PHYSICS

- Sulokya Bibhuty — 3 Years Classroom
- Saksham Bishnoi — 4 Years Classroom

ASTRONOMY

- Sulokya Bibhuty — 3 Years Classroom

MATHEMATICS (IOQM)

- Priyanshi — 4 Years Classroom

Saksham Bishnoi qualified the Chemistry Olympiad twice and was selected for the Orientation-cum-Selection Camp at HBCSE, Mumbai.

16 selections	16 of 35	AIR 168
in JEE Advanced 2026	students of the batch selected	best JEE Advanced rank

Start where they started.

Register for ZEST - ₹200 · www.zigyan.com/scholarship/zest

+91 92115 38800
info@zigyan.com

Given in the question paper

Physical constants you may need....

Mass of electron $m_e = 9.10\times10^{-31}\,kg$	Magnitude of charge on electron $e = 1.60\times10^{-19}\,C$
Mass of proton $m_p = 1.67\times10^{-27}\,kg$	Planck's constant $h = 6.625\times10^{-34}\,Js$
Acceleration due to gravity g = 9.81 ms^{-2}	Density of seawater at $\rho = 1.03\times10^{3}\,kg\,m^{-3}$
Universal gravitational constant $G = 6.67\times10^{-11}\,Nm^2Kg^{-2}$	$(1+x)^n \approx 1+nx,\ \text{if}\ \lvert x\rvert << 1$
Universal gas constant $R = 8.31\ Jmol^{-1}\,K^{-1}$	$1eV = 1.6\times10^{-19}\,J$
Boltzmann constant $k = 1.38\times10^{-23}\,J\,K^{-1}$	$\sin(A-B) = \sin A\cos B - \cos A\sin B$
Avogadro's constant $A = 6.02\times10^{23}\,mol^{-1}$	$E = mc^2$, It's an equation which gives mass and energy equivalence.
Speed of light in free space $c = 3.0\times10^{8}\,ms^{-1}$	One unit of electric power = 1kWh

PART A-1 · ONE CORRECT OPTION

Q. 1 – 24 · +3 for a correct answer, –1 for a wrong one

1. Which of the following is not a function of mature RBCs?

(A) Help in classifying blood in different blood groups
(B) Help in transport of gases
(C) Synthesis of immunoglobulins
(D) Help in maintaining acid base balance in the body

Solution · Q1 **Answer: (C)**

Immunoglobulins (antibodies) are made by plasma cells, which form from B-lymphocytes.

A mature human RBC has no nucleus and no ribosomes, so it cannot make them.

RBC antigens decide blood groups, and haemoglobin carries gases and also acts as a buffer.

IAPT answer: (C) | **Zigyan answer:** (C)

2. In which of the following classes of vertebrates there are groups of animals without limbs?

(A) Fish, reptiles and mammals
(B) Reptiles only
(C) Reptiles and Amphibians
(D) Amphibians only

Solution · Q2 **Answer: (C)**

Among reptiles, snakes have no limbs.

Among amphibians, caecilians (such as Ichthyophis) have no limbs.

No group of mammals is without limbs.

IAPT answer: (C) | **Zigyan answer:** (C)

3. Which of the following groups have only one pair of wings?

(A) Honey bee, beetle, ant
(B) Butterfly, housefly, fruitfly
(C) Dragonfly, butterfly, fruitfly
(D) Housefly, fruitfly, mosquito

Solution · Q3 **Answer: (D)**

Housefly, fruitfly and mosquito belong to the order Diptera.

They have only one pair of wings. The hind pair is reduced to halteres.

IAPT answer: (D) | **Zigyan answer:** (D)

4. During an expedition to planet 'Imagitica', scientists analysed the genetic material of the organisms found there and noted the following features:

i. Amount of purines and pyrimidines is unequal

ii. Absence of thymine

iii. Unstable genetic material, with high frequency of mutation

iv. Rapid degradation at pH above 12

From the above data, what genetic material might the Imagitica inhabitants contain?

(A) ssDNA (B) dsDNA (C) ssRNA (D) dsRNA

Solution · Q4 **Answer: (C)**

Unequal purines and pyrimidines mean a single strand.

No thymine means RNA, which has uracil instead.

RNA mutates fast, and its 2′-OH group makes it break down quickly at high pH.

∴ The genetic material is ssRNA.

IAPT answer: (C) | **Zigyan answer:** (C)

5. Which of the following is most likely to show aerenchyma?

(A) Leaf base of mango
(B) Petiole of water hyacinth
(C) Seta of moss
(D) Stem of *Opuntia*

Solution · Q5 **Answer: (B)**

Aerenchyma is parenchyma with large air spaces, typical of water plants.

In water hyacinth, the air-filled petiole helps the plant to float.

IAPT answer: (B) | **Zigyan answer:** (B)

6. Given below are three statements about bryophytes:

i. Bryophytes are lower plants with plant body differentiated into root, stem and leaves.

ii. Bryophytes are devoid of xylem and phloem.

iii. Bryophytes require water for completion of their life cycle.

Which of the above statement/s is/are true with respect to bryophytes?

(A) ii only (B) i and ii (C) i and iii (D) ii and iii

Solution · Q6 **Answer: (D)**

Statement i is false, as bryophytes have no true roots, stems or leaves.

Statement ii is true, as they have no vascular tissue.

Statement iii is true, as their male gametes swim through water to reach the egg.

IAPT answer: (D) | **Zigyan answer:** (D)

7. Carbon fixation in most of the succulent plants takes place through which pathway?

(A) Calvin cycle (B) Glycolate pathway

(C) Crassulacean acid metabolism pathway (D) Hatch-Slack pathway

Solution · Q7 **Answer: (C)**

Most succulent plants fix carbon by Crassulacean acid metabolism (CAM).

Their stomata open at night to take in CO_2, which saves water.

IAPT answer: (C) | **Zigyan answer:** (C)

8. If a flower is large, wide-mouthed, white, showing anthesis after sunset, and emitting fruity or musky fragrance, it is most likely to be pollinated by:

(A) Birds (B) Bats (C) Insects (D) Baboons

Solution · Q8 **Answer: (B)**

These are the features of bat-pollinated flowers (chiropterophily).

Bats feed at night, and a large, white flower with a fruity or musky smell attracts them.

IAPT answer: (B) | **Zigyan answer:** (B)

9. Coal is a common fossil fuel. It contains 0.2 to 5.0 percent sulphur which on burning produces a gas responsible for acid rain. The number of atoms in one mole of this gas is-

(A) 6.02×10^{23} (B) 1.81×10^{23} (C) 1.81×10^{24} (D) 1.21×10^{24}

Solution · Q9 **Answer: (C)**

The gas formed on burning sulphur is SO_2.

$S + O_2 \rightarrow SO_2$

Each molecule of SO_2 has 3 atoms. So in one mole,

$$N = 3 \times 6.02 \times 10^{23}$$

$$\Rightarrow N \approx 1.81 \times 10^{24}$$

IAPT answer: (C) | **Zigyan answer:** (C)

10. The stomach fluid in human contains HCl, KCl and NaCl. The stomach fluid is highly acidic and plays an important role in the digestion of food as well as killing of bacteria. The increased acidity may lead to abdominal pain, nausea, bloating, and heartburn. Such a patient is prescribed antacid tablet which mainly contains aluminium hydroxide (Mol. Wt. 78). If the concentrations of HCl, KCl and NaCl are 0.01M each and the stomach fluid volume is 2 litre, the amount of $Al(OH)_3$ required to neutralize the fluid will be-

(A) 0.52 g (B) 1.08 g (C) 0.81 g (D) 2.16 g

Solution · Q10 **Answer: (A)**

KCℓ and NaCℓ are neutral salts. Only HCℓ is neutralised.

$3HC\ell + A\ell(OH)_3 \rightarrow A\ell C\ell_3 + 3H_2O$

Moles of HCℓ:

$$n = 0.01 \times 2 = 0.02 \text{ mol}$$

Mass of $A\ell(OH)_3$ needed:

$$m = \frac{0.02}{3} \times 78$$

$$\Rightarrow m = 0.52 \text{ g}$$

IAPT answer: (A) | **Zigyan answer:** (A)

11. A 0.500 g mixture of calcium carbonate and calcium oxide was strongly heated to produce a non-combustible gas. If the weight of the residue obtained on heating is found to be 0.434 g, the percentage of calcium oxide in the mixture is-

(A) 70% (B) 30% (C) 35% (D) 60%

Solution · Q11 **Answer: (A)**

Only calcium carbonate decomposes, and the gas given off is carbon dioxide.

$CaCO_3 \rightarrow CaO + CO_2$

Loss in mass:

$$m(CO_2) = 0.500 - 0.434 = 0.066 \text{ g}$$

$$\Rightarrow n(CO_2) = 0.066/44 = 0.0015 \text{ mol}$$

$$\Rightarrow m(CaCO_3) = 0.0015 \times 100 = 0.150 \text{ g}$$

$$\Rightarrow m(CaO) = 0.500 - 0.150 = 0.350 \text{ g}$$

Percentage of calcium oxide:

$$\frac{0.350}{0.500} \times 100 = 70\%$$

IAPT answer: (A) | **Zigyan answer:** (A)

12. Arrange the following in the increasing order of their metallic character Na, C, O, Li, Be

(A) C < O < Na < Li < Be
(B) O < C < Be < Na < Li
(C) O < C < Be < Li < Na
(D) C < O < Be < Li < Na

Solution · Q12 **Answer: (C)**

Metallic character decreases from left to right in a period and increases down a group.

Increasing order within the second period:

$$O < C < Be < Li$$

Na lies below Li in the same group, so it is the most metallic.

$$\therefore O < C < Be < Li < Na$$

IAPT answer: (C) | **Zigyan answer:** (C)

13. A 50 mL of 0.1 M acetic acid solution is taken in a beaker and two wires are dipped in it as shown in following figure.

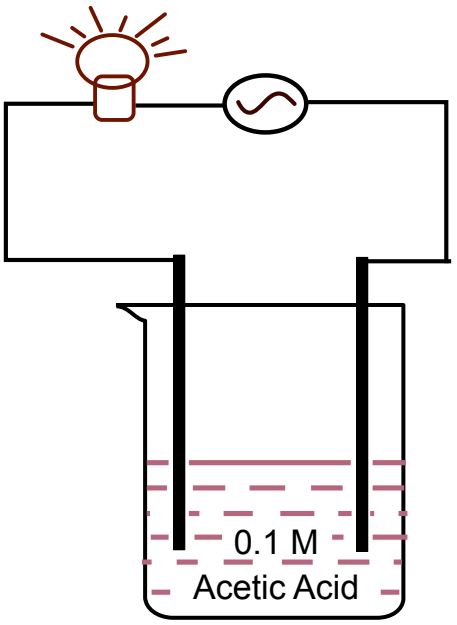

When electric supply is switched on, the bulb glows. To this solution, distilled water is added slowly till the volume doubles. During the addition of water, the intensity of the bulb-

(A) remains unchanged
(B) goes on decreasing
(C) goes on increasing
(D) suddenly becomes zero

Solution · Q13 **Answer: (C)**

Acetic acid is a weak electrolyte. On dilution, a larger fraction of it ionises, so the total number of ions increases.

The rods enter from the top. As the level rises, a longer part of each rod is inside the solution.

So the conductance between the rods keeps increasing. The current increases and the bulb goes on becoming brighter.

IAPT answer: (C) | **Zigyan answer:** (C)

14. A compound X when heated with NaOH solution produces a pungent gas that turns red litmus blue. When an aqueous solution of X is treated with $AgNO_3$ solution, a white precipitate Y is obtained which on keeping in sunlight turns grey liberating pale yellowish green gas. The aqueous solution of compound X is

(A) neutral
(B) slightly acidic
(C) slightly alkaline
(D) strongly acidic

Solution · Q14 **Answer: (B)**

The pungent gas that turns red litmus blue is NH_3, so X is an ammonium salt.

Y turns grey in sunlight and gives out chlorine gas:

$2AgC\ell \rightarrow 2Ag + C\ell_2$

So Y is $AgC\ell$ and X is $NH_4C\ell$, a salt of a strong acid and a weak base.

In water:

$NH_4^+ + H_2O \rightleftharpoons NH_4OH + H^+$

$\therefore$ The solution is slightly acidic.

IAPT answer: (B) | **Zigyan answer:** (B)

15. Equal masses of two gases among N_2, NO, O_2, CO, CO_2 and SO_2 occupy same volume at STP. These two gases are:

(A) N_2 and O_2 (B) CO and NO (C) SO_2 and CO_2 (D) N_2 and CO

Solution · Q15 **Answer: (D)**

Equal volumes at STP contain equal numbers of moles. The masses are also equal:

$$\frac{m}{M_1} = \frac{m}{M_2}$$

$$\Rightarrow M_1 = M_2$$

Molar masses in g/mol:

$$N_2 = 28, CO = 28$$

$\therefore$ The gases are N_2 and CO.

IAPT answer: (D) | **Zigyan answer:** (D)

16. When a solution and the pure solvent are separated by a semipermeable membrane, the solution exerts a pressure on the membrane called as osmotic pressure. The osmotic pressure increases with increase in number of particles (ions or molecules) in the solution. If 10 millimoles of each of the sulphate salts of sodium, magnesium and aluminium are dissolved in 1.0 litre of water in three different beakers labelled as P, Q and R respectively, the osmotic pressure follows the order-

(A) P < Q < R (B) Q < P < R (C) P > Q > R (D) P > R > Q

Solution · Q16 **Answer: (B)**

Taking complete ionisation of each salt:

$Na_2SO_4 \rightarrow 2Na^+ + SO_4^{2-}$

$MgSO_4 \rightarrow Mg^{2+} + SO_4^{2-}$

$A\ell_2(SO_4)_3 \rightarrow 2A\ell^{3+} + 3SO_4^{2-}$

Amount of ions in P, Q and R:

$$P = 10 \times 3 = 30 \text{ mmol}$$

$$Q = 10 \times 2 = 20 \text{ mmol}$$

$$R = 10 \times 5 = 50 \text{ mmol}$$

More particles give a higher osmotic pressure.

$$\therefore Q < P < R$$

IAPT answer: (B) | **Zigyan answer:** (B)

17. The axes of a coordinate system S_2 are inclined at an angle θ to those of another coordinate system S_1. The origins of both the systems are coinciding. A particle P_1 at rest in system S_1, starts from point (−2, 0) and travels along positive direction of X_1 axis with uniform acceleration of 1.25 m/s^2 for 4 s and stops. In system S_2, particle P_2, starts from rest from the origin and travels for 2 s along positive direction of X_2 axis with uniform acceleration 5 m/s^2 and stops. If the final distance between P_1 and P_2 is 6 m, then the angle between $+Y_1$ axis and $+X_2$ axis is

(A) 36.8° (B) 53.2° (C) 106.8° (D) 126.8°

Solution · Q17 **As per Zigyan: (B)**

Final position of the first particle:

$$x_1 = -2 + \frac{1}{2} \times 1.25 \times 4^2$$

$$\Rightarrow x_1 = 8 \text{ m}$$

Distance of the second particle from the origin O:

$$r = \frac{1}{2} \times 5 \times 2^2$$

$$\Rightarrow r = 10 \text{ m}$$

The sides of the triangle formed with O are 8 m, 10 m and 6 m:

$$8^2 + 6^2 = 10^2$$

So the angle at the first particle is a right angle.

$$\Rightarrow \cos\theta = \frac{8}{10}$$

$$\Rightarrow \theta \approx 36.87°$$

The angle θ is taken anticlockwise, the positive sense. So the angle between $+Y_1$ and $+X_2$ is:

$$90° - 36.87° = 53.13°$$

This matches the option 53.2°.

Reference: NCERT Mathematics Class XI, Chapter 3 'Trigonometric Functions', section 3.2 'Angles': an angle is positive for anticlockwise rotation and negative for clockwise rotation.

Check: the second particle is then at the point (8, 6) m, exactly 6 m from the first particle at (8, 0) m.

IAPT answer: (B) or (D) | **Zigyan answer:** (B)

18. The variation of a certain physical parameter Z with variable u is given by the relation $Z = A\left(\frac{R}{R+u}\right)^3$, where R and A are constants and the maximum value of u ≪ R. Then to find R, a student plots a graph of variation of Z (Y axis) against u (X axis). The graph is a

(A) straight line passing through origin and slope = $\frac{R}{3}$

(B) straight line with intercept $\frac{3A}{2}$ and slope = $-\frac{R}{3A}$

(C) straight line with intercept A and slope = $-\frac{3A}{R}$

(D) straight line with intercept $-\frac{A}{2}$ and slope = − 3R

Solution · Q18 **As per Zigyan: (C)**

$$Z = A\left(1+\frac{u}{R}\right)^{-3}$$

Since u ≪ R, use the binomial approximation:

$$Z \approx A\left(1-\frac{3u}{R}\right)$$

$$\Rightarrow Z \approx A - \frac{3A}{R}u$$

Compare with the equation of a straight line:

$$y = c + mx$$

So the graph is a straight line. Its intercept and slope are:

$$c = A$$

$$m = -\frac{3A}{R}$$

Why Zigyan differs from IAPT: the condition u ≪ R makes the graph a straight line to first order, with exactly the intercept and slope given in option (C).

Reference: NCERT Physics Class XI (Part I), Chapter 7 'Gravitation', section 7.6: for a height much smaller than the Earth's radius, the same binomial step makes the expression for g linear in height.

Check: when u is one hundredth of R, the exact value of Z is 0.9706 A and the straight line gives 0.97 A.

IAPT answer: question dropped by IAPT | **Zigyan answer:** (C)

19. A submarine S_1 is parked at a depth of 200 m in an ocean on earth. Assume oceans exist on Mars. At about what depth a submarine S_2 has to be parked in an ocean on Mars so that S_2 will experience same pressure as that of S_1? Acceleration due to gravity on Mars is 3.7 m/s^2. (Assume that sea water density on Earth and Mars is same, $\rho = 1.03 \times 10^3$ kg / m^3)

(A) 158 m (B) 435 m (C) 530 m (D) 616 m

Solution · Q19 **Answer: (C)**

The water column must give the same pressure on both planets:

$$\rho g_E h_1 = \rho g_M h_2$$

$$\Rightarrow h_2 = \frac{9.81 \times 200}{3.7}$$

$$\Rightarrow h_2 \approx 530 \text{ m}$$

IAPT answer: (C) | **Zigyan answer:** (C)

20. In an oscillating system, damping results in dissipation of the stored energy. The following figure shows the variation of displacement x with time t for an oscillating system. Which of the following statements best describes this physical phenomenon.

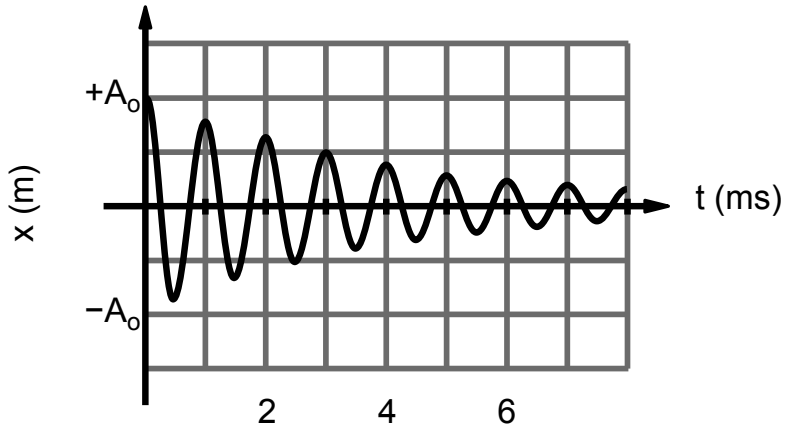

(A) Oscillatory motion of an object without damping

(B) Oscillatory motion of an object with damping such that time measurement was started when the system was at the mean position.

(C) Oscillatory motion of an object with damping with decreasing time period.

(D) Oscillatory motion of an object with damping such that time measurement was started when the system had maximum potential energy.

Solution · Q20 **Answer: (D)**

The graph starts at its largest displacement:

$$t = 0, x = +A_o$$

So timing began at an extreme position, where the potential energy is maximum.

The amplitude keeps decreasing, so the motion is damped.

The crests stay equally spaced, so the time period does not decrease.

IAPT answer: (D) | **Zigyan answer:** (D)

21. In the adjacent circuit, the galvanometer G does not show any deflection. If R = 2 Ω, the current drawn from the cell is

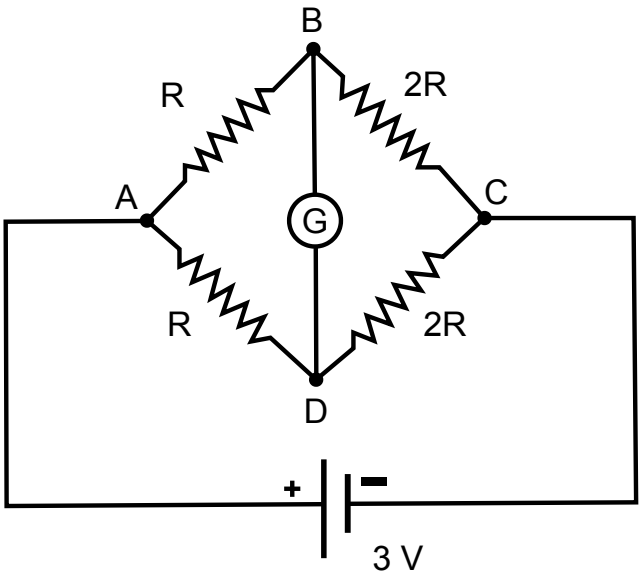

(A) 1 A
(B) 9 A
(C) 4 A
(D) $\frac{9}{4}$ A

Solution · Q21 **Answer: (A)**

The galvanometer shows no deflection, so the bridge is balanced and no current flows through it.

Resistance of the upper path, and also of the lower path:

$$R + 2R = 6\ \Omega$$

These two paths are in parallel:

$$R_{eq} = \frac{6}{2}\ \Omega$$

$$\Rightarrow R_{eq} = 3\ \Omega$$

$$I = \frac{V}{R_{eq}}$$

$$\Rightarrow I = \frac{3}{3}\ A$$

$$\Rightarrow I = 1\ A$$

IAPT answer: (A) | **Zigyan answer:** (A)

22. 'Gear' is a mechanical system used to transfer mechanical and rotary motion from one mechanical system to another. As shown in the figure below the driving wheel A drives the driven wheel B without slipping and thus forms the gear system. The wheel A has 16 teeth and B has 24 teeth. Wheel B has a projection (shown by white ring in Fig. 1 and also in the side view of Fig. 2) of radius $\frac{14}{11}$ cm.

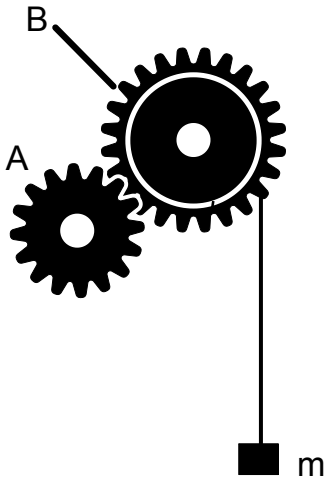

Fig. 1

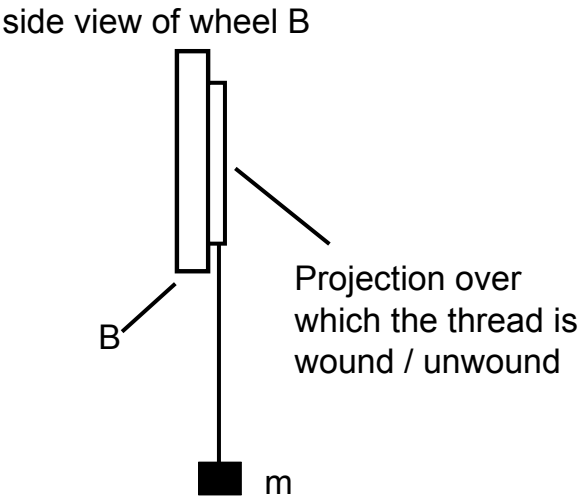

Fig. 2

A long massless, inextensible string can be wound / unwound over this circular projection. A mass m is attached to the free end of this long string. If the wheel A makes 6 revolutions per second in the clockwise direction, without slipping, then in $\frac{1}{2}$ second the potential energy of the mass m in CGS unit

(A) increases by 32mg
(B) decreases by 32mg
(C) increases by 16mg
(D) decreases by 16mg

Solution · Q22 **Answer: (C)**

Both wheels pass the same number of teeth each second:

$$16 \times 6 = 24 n_B$$

$$\Rightarrow n_B = 4\ s^{-1}$$

So wheel B makes 2 turns in half a second. The string length wound or unwound is:

$$h = 2 \times 2\pi r$$

$$\Rightarrow h = 4 \times \frac{22}{7} \times \frac{14}{11}\ cm$$

$$\Rightarrow h = 16\ cm$$

A turns clockwise, so B turns anticlockwise. The right side of B moves up, so the string winds and the mass rises.

Gain in potential energy, in CGS unit:

$$\Delta U = mgh = 16mg$$

∴ The potential energy increases by 16mg.

IAPT answer: (C) | **Zigyan answer:** (C)

23. Canopus is the second brightest star in the night sky. It is about 300 light years away. The energy is produced inside the star through nuclear reactions. If we receive 5.0×10^{-8} W/m^2 energy from Canopus, how much mass does it lose per second?

(A) 1.70×10^{-6} kg (B) 1.91×10^{9} kg (C) 5.62×10^{13} kg (D) 6.34×10^{31} kg

Solution · Q23 **Answer: (C)**

Distance of Canopus:

$$d = 300 \times 9.46 \times 10^{15} = 2.838 \times 10^{18} \text{ m}$$

The star radiates equally in all directions, so its power is

$$P = 4\pi d^2 I$$

$$\Rightarrow P = 4\pi \times (2.838 \times 10^{18})^2 \times 5.0 \times 10^{-8}$$

$$\Rightarrow P \approx 5.06 \times 10^{30} \text{ W}$$

Mass lost in one second:

$$m = \frac{P}{c^2} = \frac{5.06 \times 10^{30}}{\left(3 \times 10^8\right)^2}$$

$$\Rightarrow m \approx 5.62 \times 10^{13} \text{ kg}$$

IAPT answer: (C) | **Zigyan answer:** (C)

24. An average human adult radiates about 100 W energy mainly in infra-red region of the electromagnetic spectrum. 50 persons are sitting in a hall with an air conditioning system which is 50% efficient. How much electricity must be used to maintain temperature of the hall at 25°C for 4 hours?

(A) 5 units (B) 10 units (C) 20 units (D) 40 units

Solution · Q24 **Answer: (D)**

Heat given out by 50 persons each second:

$$P = 50 \times 100 \text{ W} = 5 \text{ kW}$$

An efficiency of 50% here means the heat removed is half the electrical energy used.

$$\Rightarrow P_{input} = 5/0.50 = 10 \text{ kW}$$

Energy used in 4 hours:

$$E = 10 \text{ kW} \times 4 \text{ h} = 40 \text{ kWh}$$

As 1 kWh is 1 unit, 40 units are needed.

IAPT answer: (D) | **Zigyan answer:** (D)

PART A-2 · ONE OR MORE CORRECT OPTIONS

Q. 25 – 33 · 6 marks only if all correct options are marked · no negative marking

25. Given below are four statements about viruses. Which of the following statement/s is/are incorrect?

(A) All known viruses contain RNA as the genetic material.

(B) During viral multiplication, a complementary DNA is produced in riboviruses.

(C) Viruses are the smallest, freely living cells found on the planet.

(D) DNA containing viruses are more susceptible to mutations when compared to RNA containing viruses and hence show a very rapid evolution.

Solution · Q25 **As per Zigyan: (A), (C), (D)**

(A) Many viruses, such as most bacteriophages, have DNA, so this statement is incorrect.

(B) Retroviruses such as HIV are riboviruses that copy their RNA into complementary DNA, so this statement is correct.

(C) Viruses are not cells and multiply only inside host cells, so this statement is incorrect.

(D) RNA is less stable than DNA, so RNA viruses mutate and evolve faster. This statement is incorrect.

Reference: NCERT Biology Class XI, Chapter 2 'Biological Classification', section 2.6: viruses are non-cellular obligate parasites, and their genetic material may be RNA or DNA.

Reference: NCERT Biology Class XII, Chapter 5 'Molecular Basis of Inheritance', sections 5.1.1 and 5.2.2: in some viruses information passes from RNA to DNA; viruses with RNA genomes and short life spans mutate and evolve faster.

IAPT answer: (A), (C), (D) | **Zigyan answer:** (A), (C), (D)

26. During a race, Ramesh was thrown off the horse back and suffered an injury in the front part of head. Upon thorough examination, Ramesh was found to have injury to the front part of the head. Which of the following can be the possible outcome/s of this injury?

(A) Trouble in speaking properly

(B) Inability to smell

(C) Inability to walk on a narrow path

(D) Inability to maintain blood pressure

Solution · Q26 **As per Zigyan: (A), (B), (C)**

The injury is in the region of the frontal lobe of the fore-brain.

(A) The frontal lobe has the speech area that produces words, so speaking can be affected.

(B) Fibres carrying the sense of smell lie under the frontal lobe and can tear, so smell can be lost.

(C) The frontal lobe has the motor area that commands the leg muscles, so walking on a narrow path can be affected.

(D) Blood pressure is controlled by the medulla in the hind-brain, away from this injury.

Reference: NCERT Science Class X, Chapter 6 'Control and Coordination', section 6.1.2: motor areas of the fore-brain control voluntary muscles such as leg muscles, while the medulla in the hind-brain controls blood pressure.

Reference: OpenStax Anatomy and Physiology 2e, section 14.1 'Sensory Perception': blunt injury to the face can shear smell nerve fibres when the frontal lobe moves, causing loss of smell.

IAPT answer: (A), (B), (C) | **Zigyan answer:** (A), (B), (C)

27. Which of the following molecules are primarily responsible for structural support and motility?

(A) Actin (B) Tubulin alpha (C) Lamins (D) Desmin

Solution · Q27 **Answer: (A), (B)**

(A) Actin forms microfilaments, which support the cell and bring about movements such as muscle contraction and amoeboid movement.

(B) Alpha tubulin builds microtubules, which support the cell and are used to move cilia and flagella.

(C), (D) Lamins and desmin form intermediate filaments, which give mechanical strength but do not themselves produce movement.

IAPT answer: (A), (B) | **Zigyan answer:** (A), (B)

28. The types of bonding found in dry ice is/are

(A) Covalent (B) Ionic

(C) Metallic (D) Vander Waal forces

Solution · Q28 **Answer: (A), (D)**

Dry ice is solid CO_2.

Inside each molecule, carbon and oxygen are joined by covalent bonds.

The molecules are held to one another by weak van der Waals forces.

There are no ions and no metallic bonds.

IAPT answer: (A), (D) | **Zigyan answer:** (A), (D)

29. The compound/s that raise/s the temperature of water (from room temperature) on dissolving in it is/are-

(A) Ammonium chloride (B) Potassium hydroxide

(C) Glucose (D) Conc. HCl

Solution · Q29 **Answer: (B), (D)**

The water warms up when dissolving gives out heat.

(A) $NH_4C\ell$ takes in heat, so the water cools.

(B) KOH gives out much heat, so the water warms.

(C) Glucose takes in a little heat, so the temperature does not rise.

(D) Diluting concentrated $HC\ell$ gives out heat, so the water warms.

IAPT answer: (B), (D) | **Zigyan answer:** (B), (D)

30. Soaps and detergents are common agents used in laundry industry. They are long chain hydrocarbons with ionic terminals of cationic or anionic nature. A 1% (w/v) soap solution X and 1% (w/v) detergent solution Y were prepared in distilled water. Each of the solutions was divided in two equal parts and labelled as X_1, X_2, Y_1 and Y_2. 1 g NaCl was added to X_1 and Y_1 each while 1 g $CaCl_2$ was added to X_2 and Y_2 each. Which of the following observations is/are correct?

(A) X_1 shows slimy precipitate

(B) X_2 shows slimy precipitate

(C) Y_1 shows slimy precipitate

(D) Y_2 shows slimy precipitate

Solution · Q30 **Answer: (B)**

A slimy precipitate (scum) forms when soap meets Ca^{2+} or Mg^{2+} ions.

In X_2, the soap forms an insoluble calcium salt:

$2RCOONa + CaC\ell_2 \rightarrow (RCOO)_2Ca\downarrow + 2NaC\ell$

Detergents form no such precipitate with calcium ions, so Y_2 shows none.

$NaC\ell$ adds no calcium or magnesium ions, so X_1 and Y_1 form no scum.

IAPT answer: (B) | **Zigyan answer:** (B)

31. According to Einstein's theory, light can be assumed to be in the form of a large number of discrete energy packets called 'photons'. In case of light of frequency ν, each photon carries energy E = hν. In a certain surgical procedure a surgeon uses LASER beam of wavelength 650 nm in pulses of 30.0 ms duration. The average power of each pulse is 0.6 W. Here h is Planck's constant. Then

(A) the frequency of this LASER photon is 4.6×10^{14} Hz

(B) the energy in each pulse is 1.1×10^{17} eV

(C) energy of one photon is 3.1×10^{-19} J

(D) number of photons in each pulse is 5.9×10^{16}

Solution · Q31 **Answer: (A), (B), (C), (D)**

(A) Frequency:

$$\nu = \frac{c}{\lambda} = \frac{3 \times 10^8}{650 \times 10^{-9}}$$

$$\Rightarrow \nu \approx 4.6 \times 10^{14} \text{ Hz}$$

(B) Energy of one pulse:

$$E = Pt = 0.6 \times 30.0 \times 10^{-3} = 0.018 \text{ J}$$

$$\Rightarrow E = 0.018/(1.6 \times 10^{-19}) \approx 1.1 \times 10^{17} \text{ eV}$$

(C) Energy of one photon:

$$E_1 = h\nu = 6.63 \times 10^{-34} \times 4.62 \times 10^{14}$$

$$\Rightarrow E_1 \approx 3.06 \times 10^{-19} \text{ J}$$

(D) Number of photons in one pulse:

$$N = 0.018/(3.06 \times 10^{-19}) \approx 5.9 \times 10^{16}$$

All four statements are true.

IAPT answer: (A), (B), (C), (D) | **Zigyan answer:** (A), (B), (C), (D)

32. In the following circuit, $R_1 = 6\ \Omega$, $R_2 = 12\ \Omega$, $V = 16$ V. The currents I_1 and I_2 flow through the resistances R_1 and R_2 respectively

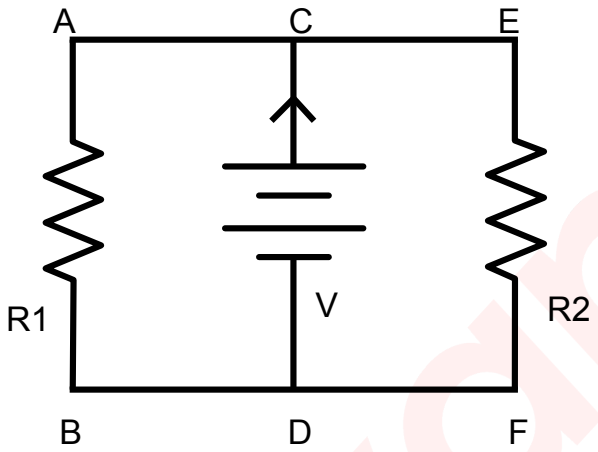

(A) power generated across R_1 is 42.6 watt

(B) the ratio of $\frac{I_1}{I_2} = 2$

(C) total current drawn from the cell is 4 ampere

(D) as $R_2 = 2\ R_1$, the voltage across R_2 will be twice the voltage across R_1

Solution · Q32 **Answer: (A), (B), (C)**

The two resistors are in parallel, so each has 16 V across it.

$$I_1 = 16/6 = 8/3\ \text{A}$$

$$I_2 = 16/12 = 4/3\ \text{A}$$

(A) Power in the first resistor:

$$P_1 = 16^2/6 \approx 42.67\ \text{W}$$

The value 42.6 W is this result cut after one decimal place, so (A) is true.

(B) Ratio of the currents:

$$I_1/I_2 = (8/3)/(4/3) = 2$$

So (B) is true.

(C) Total current:

$$I = I_1 + I_2 = 4\ \text{A}$$

So (C) is true.

(D) Both resistors have the same voltage, so (D) is false.

IAPT answer: (A), (B), (C) | **Zigyan answer:** (A), (B), (C)

33. A glass plate of uniform thickness t and refractive index μ is as shown in the diagram. AB is the incident ray and FG is the emergent ray. The angles of incidence and refraction are i and r respectively. The perpendicular distance FC = x between the incident and the emergent rays is called the lateral shift. Then

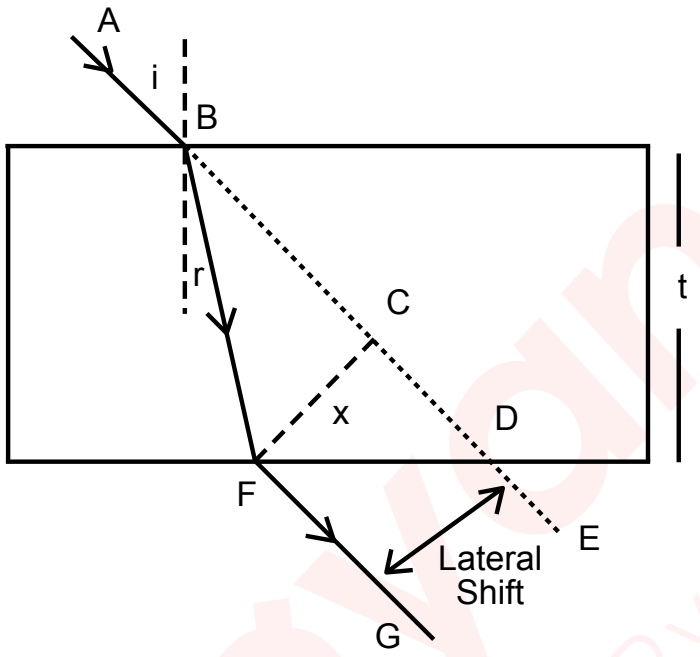

(A) $x = t\left(\sin i - \frac{\cos i \sin r}{\cos r}\right)$

(B) x depends on refractive index μ

(C) x is independent of the wavelength λ of light

(D) Maximum value of x = t when i is close to 90°

Solution · Q33 **Answer: (A), (B), (D)**

(A) From the figure:

$$BF = \frac{t}{\cos r}$$

$$x = BF \sin(i - r)$$

$$\Rightarrow x = t\left(\sin i - \frac{\cos i \sin r}{\cos r}\right)$$

So (A) is true.

(B) By Snell's law, r depends on μ, so x depends on μ. True.

(C) μ changes with wavelength, so x depends on λ. False.

(D) The shift increases with i. As i approaches 90°,

$\cos i \to 0$

$\Rightarrow x \to t$

So t is the limiting maximum value. True.

IAPT answer: (A), (B), (D) | **Zigyan answer:** (A), (B), (D)

ANSWER KEY

IOQJS 2021-22 · PAPER CODE 51

33
QUESTIONS · 126 MARKS

IAPT final answer key for paper code 51. ★ marks an answer given as per Zigyan.

1	(C)	2	(C)	3	(D)	4	(C)	5	(B)
6	(D)	7	(C)	8	(B)	9	(C)	10	(A)
11	(A)	12	(C)	13	(C)	14	(B)	15	(D)
16	(B)	17	(B)★	18	(C)★	19	(C)	20	(D)
21	(A)	22	(C)	23	(C)	24	(D)	25	(A), (C), (D)★
26	(A), (B), (C)★	27	(A), (B)	28	(A), (D)	29	(B), (D)	30	(B)
31	(A), (B), (C), (D)	32	(A), (B), (C)	33	(A), (B), (D)				

★ Answers as per Zigyan

- **Q17** — As per Zigyan: (B); IAPT key (B) or (D).
- **Q18** — As per Zigyan: (C); dropped by IAPT.
- **Q25** — As per Zigyan: (A), (C), (D); IAPT key (A), (C), (D).
- **Q26** — As per Zigyan: (A), (B), (C); IAPT key (A), (B), (C).

zigyan

OLYMPIADS · 2026

Olympiad results



TOP ACHIEVEMENT · CHEMISTRY

Qualified the Chemistry Olympiad twice, and selected for the HBCSE camp.

Saksham Bishnoi reached the national stage of the Chemistry Olympiad in two consecutive years and was selected for the Orientation-cum-Selection Camp at HBCSE, Mumbai. 4 Years Classroom - the same student who took AIR 168 in JEE Advanced 2026.

Qualified twice | HBCSE selection camp | Only student from Faridabad

Above MAS means above the **Minimum Admissible Score**: clearing it puts a student in the national band for their subject. It is a real threshold, not a participation marker.

CHEMISTRY · ABOVE MAS



Sulokya Bibhuty
Class XII
3 Years Classroom
Above MAS



Anay Gupta
Class XI
3 Years Classroom
Above MAS



Akshat Khator
Class XI
3 Years Classroom
Above MAS



Harshit Goyal
Class XII
4 Years Classroom
Above MAS



Hardik Sharma
Class XI
3 Years Classroom
Above MAS



Aarush Kumar
Class XII
1 Year Classroom
Above MAS

PHYSICS · ASTRONOMY · MATHEMATICS

PHYSICS



Sulokya Bibhuty
Class XII
3 Years Classroom
Above MAS

PHYSICS



Saksham Bishnoi
Class XII
4 Years Classroom
Above MAS

ASTRONOMY



Sulokya Bibhuty
Class XI
3 Years Classroom
Above MAS

MATHEMATICS · IOQM



Priyanshi
Class XI
4 Years Classroom
IOQM Qualifier

OLYMPIADS WE PREPARE STUDENTS FOR

NSEP	NSEC	NSEB	NSEA	IOQM	NSEJS
Physics	Chemistry	Biology	Astronomy	Mathematics	Class X and below

The olympiad pathway starts in Class 8.

NSEJS is open to Class 10 and below - the habit of staying with one hard problem is the one JEE Advanced rewards.

Zigyan Eduvision Pvt. Ltd. · SCO No. 107, Sector 16, Faridabad 121002
0129-4048800 · +91 92115 38800 · info@zigyan.com

zigyan

RESULTS · 2021 – 2026

Our toppers, year by year

40
JEE Advanced selections in 6 years

AIR 168
best rank — Saksham Bishnoi, 2026

16 of 35
students selected, JEE Advanced 2026

14 of 35
above 98 percentile, JEE Main 2026

JEE ADVANCED SELECTIONS PER YEAR

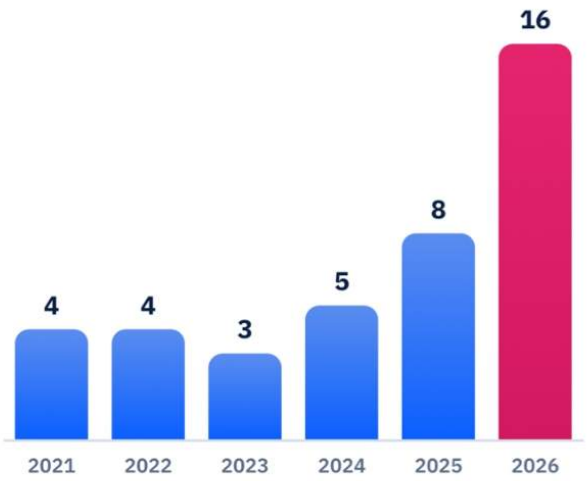

BEST RANK EACH YEAR

YEAR	JEE ADVANCED	JEE MAIN
2026	**Saksham Bishnoi** AIR 168 · 4 Years Classroom	**Saksham Bishnoi** AIR 811 · 99.95 %ile
2025	**Chakshu** AIR 4,233 · 2 Years Classroom	**Chakshu** AIR 8,538 · 99.44 %ile
2024	**Harshit** AIR 777 · 2 Years Classroom	**Harshit** AIR 1,473 · 99.91 %ile
2023	**Aditya Jain** AIR 2,373 · 2 Years Classroom	**Aditya Jain** AIR 2,503 · 99.79 %ile
2022	**Rachit Sharma** AIR 698 · 1 Year Classroom	**Rachit Sharma** AIR 1,016 · 99.90 %ile
2021	**Sparsh Mittal** AIR 2,237 · 1 Year Classroom	**Sparsh Mittal** AIR 1,562

JEE ADVANCED 2026 — THIRTEEN NAMED SELECTIONS



Saksham Bishnoi
AIR 168
4 Years Classroom



Sulokya Bibhuty
AIR 1,315
3 Years Classroom



Aarush
AIR 2,699
1 Year Classroom



Manishka
AIR 2,869
4 Years Classroom



Oojit Kumar
AIR 5,765
4 Years Classroom



Harshit Goyal
AIR 6,407
4 Years Classroom



Pranab Sharma
AIR 6,750
3 Years Classroom



Aditya Dhar
AIR 15,183
3 Years Classroom



Arpit Anshuman
AIR 19,308
4 Years Classroom



Lokesh
AIR 22,857
3 Years Classroom



Arjun
AIR 24,674
3 Years Classroom



Sanyam Gulyani
AIR 25,123
1 Year Classroom



Saket
AIR 27,628
3 Years Classroom

Sixteen students of the 2026 batch were selected in JEE Advanced; the thirteen above are named with their All India Rank.

JEE MAIN 2026 — TOP SIX, WITH PERCENTILE



Saksham Bishnoi
AIR 811
99.95 %ile
4 Years Classroom



Sulokya Bibhuty
AIR 1,095
99.94 %ile
3 Years Classroom



Harshit Goyal
AIR 2,662
99.83 %ile
4 Years Classroom



Manishka
AIR 4,817
99.70 %ile
4 Years Classroom



Oojit Kumar
AIR 5,040
99.69 %ile
4 Years Classroom



Aarush
AIR 5,276
99.67 %ile
1 Year Classroom

14 of the 35 students in the 2026 batch scored above the 98th percentile in JEE Main.

Zigyan Eduvision Pvt. Ltd. · SCO No. 107, Sector 16, Faridabad 121002
0129-4048800 · +91 92115 38800 · info@zigyan.com