zigyan

PREVIOUS YEAR PAPER · 2022

OLYMPIAD · STAGE I

NSEJS

National Standard Examination in Junior Science

2022

Question paper with official answer key

60	216	120 min	51
Questions	Maximum marks	Time	Paper code

Question paper and official answer key: Indian Association of Physics Teachers (IAPT), NSEJS 2022, paper code 51.
Solutions and notes: Zigyan. This booklet is not an IAPT publication.

Prepare for the Olympiads with Zigyan

www.zigyan.com

zigyan

SCO No. 107, Sector 16, Faridabad, Haryana 121002
0129-4048800 · +91 92115 38800 · info@zigyan.com

zigyan

JEE 2026 RESULTS

OUR TOPPERS

When talent meets the right guidance.

Saksham Bishnoi and Sulokya Bibhuty - our JEE 2026 toppers from Zigyan, Sector 16 - with the programme they took and the rank they earned.



Rahul Kaushik Sir
Founder & Director, Zigyan Eduvision
23 years of teaching



Saksham Bishnoi

4 YEARS CLASSROOM

JEE ADVANCED 2026	JEE MAIN 2026
AIR 168	AIR 811
	99.95 percentile



Sulokya Bibhuty

3 YEARS CLASSROOM

JEE ADVANCED 2026	JEE MAIN 2026
AIR 1,315	AIR 1,095
	99.94 percentile

OLYMPIAD RESULTS

Above the Minimum Admissible Score - the national band for the subject

CHEMISTRY

- Sulokya Bibhuty — 3 Years Classroom
- Anay Gupta — 3 Years Classroom
- Akshat Khator — 3 Years Classroom
- Harshit Goyal — 4 Years Classroom
- Hardik Sharma — 3 Years Classroom
- Aarush Kumar — 1 Year Classroom

PHYSICS

- Sulokya Bibhuty — 3 Years Classroom
- Saksham Bishnoi — 4 Years Classroom

ASTRONOMY

- Sulokya Bibhuty — 3 Years Classroom

MATHEMATICS (IOQM)

- Priyanshi — 4 Years Classroom

Saksham Bishnoi qualified the Chemistry Olympiad twice and was selected for the Orientation-cum-Selection Camp at HBCSE, Mumbai.

16 selections	16 of 35	AIR 168
in JEE Advanced 2026	students of the batch selected	best JEE Advanced rank

Start where they started.

Register for ZEST - ₹200 · www.zigyan.com/scholarship/zest

+91 92115 38800
info@zigyan.com

Given in the question paper

Constants you may need….

Mass of electron $m_e = 9.10 \times 10^{-31}$ kg

Mass of proton $m_p = 1.67 \times 10^{-27}$ kg

Acceleration due to gravity $g = 9.8\ ms^{-2}$

Universal gravitational constant $G = 6.67 \times 10^{-11}\ Nm^2Kg^{-2}$

Universal gas constant $R = 8.31\ Jmol^{-1}\ K^{-1}$

Boltzmann constant $k = 1.38 \times 10^{-23}\ JK^{-1}$

Avogadro's constant $A = 6.02 \times 10^{23}\ mol^{-1}$

Speed of light in free space $c = 3.0 \times 10^{8}\ ms^{-1}$

Magnitude of charge on electron $e = 1.60 \times 10^{-19}$ C

Planck's constant $h = 6.625 \times 10^{-34}$ Js

Density of water at $\rho = 1.0 \times 10^{3}\ kgm^{-3}$

$(1 + x)^n \approx 1 + nx$, if $|x| << 1$

$1eV = 1.6 \times 10^{-19}$ J

$\sin(A–B) = \sin A \cos B - \cos A \sin B$

$E = mc^2$, It's an equation which gives mass and energy equivalence.

One unit of electric power = 1kWh

PART A-1 · ONE CORRECT OPTION

Q. 1 – 48 · +3 for a correct answer, –1 for a wrong one

1. In nineteenth century, farmers in Japan found that some seedlings of rice became very tall. They called it 'Bakane Disease' or mad seedling disease. All these mad plants were found to be infected by a fungus, *Fusarium moniliforme*. This led to the discovery of a phytohormone, later named:

(A) Vernalin (B) Auxin (C) Florigen (D) Gibberellin

2. In most angiosperms, when the ovule is mature, the pollen germinates on stigma, travels through style and ultimately enters the ovule. In the adjacent diagram, three possibilities of pollen tube entry are shown. What do A, B and C represent?

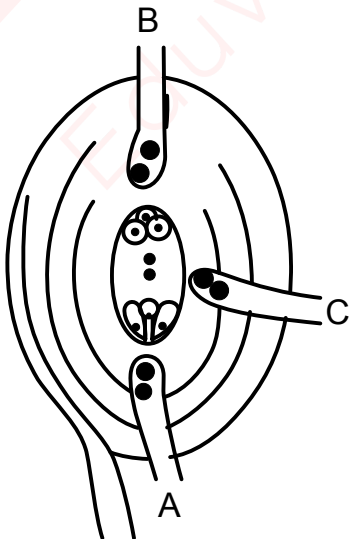

(A) A- Mesogamy, B- Chalazogamy & C- Porogamy

(B) A- Porogamy , B-Chalazogamy & C- Mesogamy

(C) A- Chalazogamy, B- Mesogamy & C- Porogamy

(D) A & B – Porogamy, C-Chalazogamy

3. It is a common observation that members of Cucurbitaceae, like bottle- gourd, pumpkin, watermelon, musk melon, etc. have large fruits while their stems are usually not more than a finger thick. What helps so much food to be translocated from leaves to the fruits for storage?

(A) Intraxylary phloem
(B) Sieve-tubes with companion cells
(C) Bicollateral vascular bundles
(D) Trichomes on internodes

4. In some birds, black plumage gene is dominant over white plumage gene. One black bird was mated with white feathered bird. It resulted in all chicks with blue plumage. Selfing among these blue birds would result in:

(A) 1 black : 1 white : 2 blue
(B) 9 blue : 3 black : 3 white
(C) 1 blue : 1 black : 1 white
(D) 3 blue : 1 white

5. The adjacent diagram shows chromatographic separation of plant pigments, extracted from spinach leaves. The sequence of pigment bands from below upwards is:

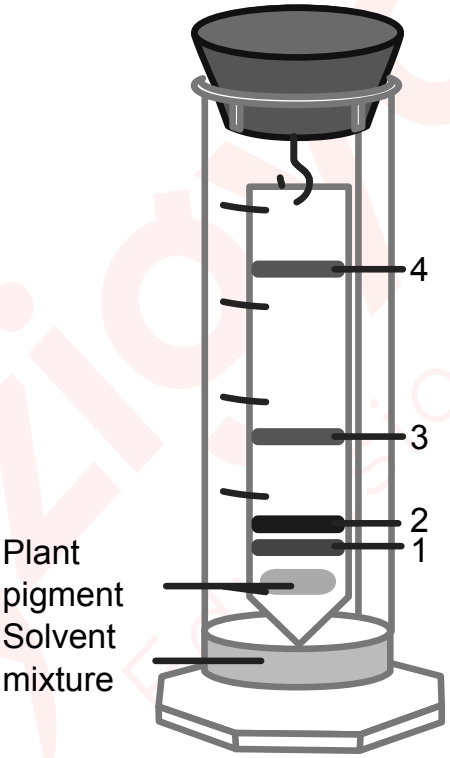

(A) Chlorophyll b, Chlorophyll a, Carotenols & Carotenes
(B) Carotenes, Carotenols, Chlorophyll a & Chlorophyll b
(C) Chlorophyll a, Chlorophyll b, Carotenes & Carotenols
(D) Carotenols, Phycobilins, Chlorophyll a & Chlorophyll b

6. In some plants and fungi, some cell organelles are found which convert lipids to sugar in early stages of oil seed's germination. What are these?

(A) Glyoxysomes (B) Lysosomes (C) Ribosomes (D) Liposomes

7. In the analysis of waste water, *Escherichia coli* is used as:

(A) A standard organism for performing a plate count

(B) An indicator of fecal contamination of water

(C) An indicator of the number of N_2 fixing bacteria in water

(D) A measure of the amino acid content of water

8. Acid rain damages soil and lakes. Its high level depositions have damaged high altitude forests since being encircled by acidic fogs and clouds. It also affects aquatic plants and animals. Which pH range is most suitable for the survival of aquatic biota?

(A) 4.5 – 5.8 (B) 6.5 – 7.5 (C) 7.5 – 8.5 (D) Above 9.0

9. Steroid hormones include sex hormones and hormones from adrenal cortex. Based on the intensity of action which of the following ovarian hormones is produced in large amount ?

(A) Estrone (B) Estriol (C) Estradiol (D) Estrane

10. In the vertebrae column of man, there are about 26 vertebrae. Which of the following vertebrae is related with the pelvis region?

(A) Lumbar (B) Coccygeal (C) Sacral (D) Cervical

11. In the following EMP pathway, enzymes catalyzing the reactions are numbered E_1 to E_{10}. At which enzyme levels, ATPs are generated at substrate level?

Glucose $\xrightarrow{E1}$ Glocose-6-phosphate $\xrightarrow{E2}$ Fructose-6-phosphate $\xrightarrow{E3}$ Fructose1, 6 Diphosphate $\xrightarrow{E4}$

Dihydroxyacetone Phos. $\xrightarrow{E5}$ 3 Phosphoglyceraldehyde $\xrightarrow{E6}$ 1, 3 Diphosphoglyceraldehyde $\xrightarrow{E7}$

3 Phosphoglyceric Acid $\xrightarrow{E8}$ 2 Phosphoglyceric Acid $\xrightarrow{E9}$ Phosphoenol Pyruvic Acid $\xrightarrow{E10}$

Pyruvic Acid.

(A) E1 and E3 (B) E3 and E6 (C) E7 and E10 (D) E6 and E10

12. A thick whitish band of semicircular nerve fibres is found bulging upon the inner surface of the dorsal wall of each cerebral hemisphere of mammalian brain. Choose the name of this structure from the following:

(A) Corpus albicans (B) Corpus luteum (C) Corpus striatum (D) Corpus callosum

13. In animal classification, symmetry of body is a diagnostic feature. Besides truly bilateral symmetrical animals, exceptionally some other animals also exhibit bilateral symmetry. Which of the following is an example of such animals?

(A) *Giardia* (B) *Cliona* (C) *Obelia* (D) *Trypanosoma*

14. Nissl's granules are in fact RNA bodies. In which of the following do they occur?

(A) Osteon (B) Chondrion (C) Neurons (D) Myocytes

15. One of the following statements is not applicable to viruses:

(A) The protein capsid of the virus does not enter the host cell

(B) The genetic material is either DNA or RNA, never both

(C) The virion replicates autonomously outside the host

(D) The virus replicates in a bacterial or other host cell

16. Carolus Linnaeus, a Swedish botanist is credited with Binomial Nomenclature of plants and animals. While using binomials, he devised a system of classification of plants. His classification is:

(A) Artificial (B) Natural (C) Phylogenetic (D) Cladistic

17. Which bond will break when following compound is dissolved in water?

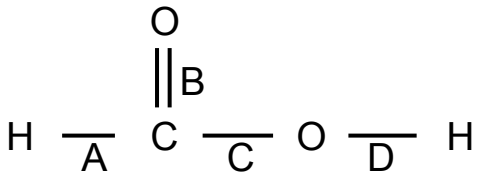

(A) A (B) B (C) C (D) D

18. If the number of compounds formed by H, C, Cl and Co are N_1, N_2, N_3, N_4 respectively, then correct order is

(A) $N_1 > N_2 > N_3 > N_4$ (B) $N_1 > N_2 > N_4 > N_3$

(C) $N_2 > N_1 > N_4 > N_3$ (D) $N_2 > N_4 > N_3 > N_1$

19. Heaviest nuclide which does not show radioactive nature is:

(A) Bismuth (B) Lead (C) Technetium (D) Neptunium

20. 1 kg of aqueous urea solution (mole fraction of solute = 0.2) is diluted to 5 kg. Mole fraction of solute in diluted solution is:

(A) 0.2 (B) 4×10^{-2} (C) 0.029 (D) 0.971

21. Nickel forms a gaseous compound of the formula $Ni(CO)_x$. What is the value of x if under similar conditions of temperature and pressure, methane effuses 3.24 times faster than the compound? (For Ni, M = 58.7)

(A) 3.9 (B) 2.1 (C) 4.7 (D) 3.0

22. Inter-particle distance between Li and H in LiH is 1.596 A^o. Observed dipole moment of LiH is 1.964×10^{-29} C.m. The percentage (%) ionic character in LiH is

(A) 56.0 % (B) 90.8 % (C) 76.8 % (D) 100 %

23. What is the percentage of $MgCO_3$ in a mixture of $MgCO_3$ and $CaCO_3$ if its 2g require 2g H_2SO_4 for complete neutralization?

(A) 89% (B) 11% (C) 50% (D) 25%

24. Sum of oxidation states of all the carbon atoms in toluene molecule is:

(A) -1 (B) $-\frac{7}{8}$

(C) $-\frac{8}{7}$ (D) -8

25. Oxidation state of oxygen in O_2PtF_6 is:

(A) $-\frac{1}{2}$ (B) -2

(C) $\frac{1}{2}$ (D) -1

26. When attacked by $Br^{\bullet}$, which H-atom will be replaced most readily?

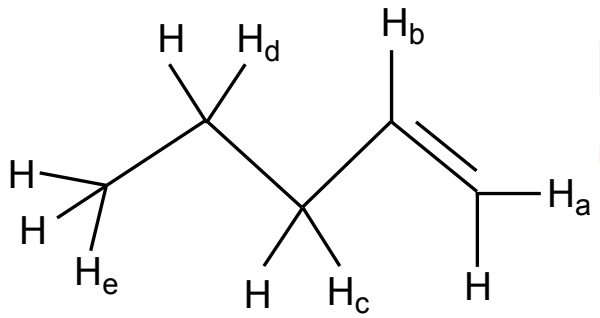

(A) H_a (B) H_b (C) H_c (D) H_d

27. Consider the molecules having formula $C_{10}H_{16}$. Which of the following structural features are not possible within this set of molecules?

(A) 2 triple bonds (B) 1 ring and 1 triple bond

(C) 3 double bonds (D) None of these

28. Which metal adsorbs hydrogen to large extent?

(A) Al (B) Cr (C) Pd (D) Zn

29. Among the following the compound which is both paramagnetic and coloured is:

(A) $K_2Cr_2O_7$ (B) $(NH_4)_2[TiCl_6]$

(C) $VOSO_4$ (D) $K_3[Cu(CN)_4]$

30. A mixture of HCOOH and $H_2C_2O_4$ is heated with Conc. H_2SO_4. The gases produced were passed through KOH solution where their volume decreased by $\frac{1}{6}$. Ratio of two acids in the mixture:

(A) 1 : 4 (B) 4 : 1

(C) 1 : 1 (D) data insufficient

31. The correct order of energy levels in H – atom is:

(A) 3s = 3p = 3d > 2s (B) 3d > 3p > 3s > 2s

(C) 3d > 3p = 3s > 2s (D) 3d > 3p > 3s = 2s

32. X_3Y_2 when reacts with A_2B_3 in aqueous solution, it gives brown colour. These are separated by a semipermeable membrane AB as shown in figure. Assuming that electrolytes are completely ionized in solution then due to osmosis there is:

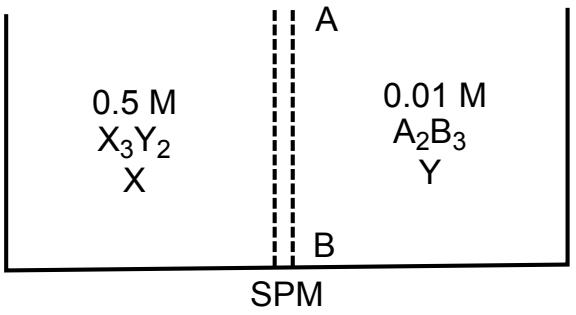

(A) brown colour formation in side X
(B) brown colour formation in side Y
(C) brown colour is formed in both sides X and Y
(D) no brown colour formation in sides X or Y

33. A particle of mass 0.3 kg starts moving from rest, in one dimension, under a force that delivers constant power P = 1.5 watt. The kinetic energy of the particle will be KE = 15 Joule after a time of

(A) 5 S (B) 10 S (C) 12 S (D) 15 S

34. A trolley of mass 200 kg carrying a sandbag of mass 20 kg is moving on a frictionless horizontal track with speed 36 km/hr. After a while, sand starts leaking out of the bag on the floor of trolley at the rate 0.04 kg/sec. What is the speed of trolley after the entire sand bag is empty?

(A) 8 m/s (B) 9.2 m/s (C) 10 m/s (D) 10.8 m/s

35. A particle, initially at rest at origin, starts moving under acceleration a along + x direction. The acceleration versus time graph is shown in figure.

The displacement and the velocity of the particle after 6 second are

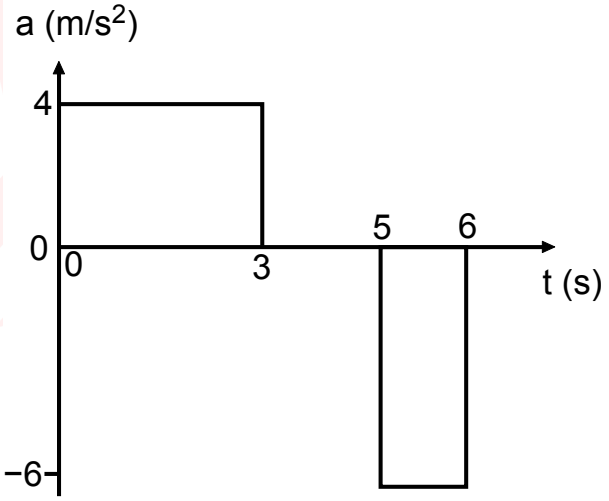

(A) 51 meter, 6 m/s (B) 33 meter, 6 m/s (C) 42 meter, 18 m/s (D) 27 meter, 24 m/s

36. Gravitational potential energy of a system of two particles of masses m_1 and m_2, separated by distance r, is given by $U = -\frac{Gm_1m_2}{r}$, where G is the universal Gravitational constant.

Consider two stars, each of mass M, initially separated by distance d and at rest with respect to each other. The two stars start moving towards each other under their mutual gravitational attraction. The stars can be treated as point objects and motion is assumed non-relativistic. As measured from the laboratory frame, the speed of each star when they are at a distance $\frac{d}{2}$ apart from each other is

(A) $\sqrt{\frac{GM}{d}}$ (B) $\sqrt{\frac{2GM}{d}}$

(C) $\sqrt{\frac{GM}{2d}}$ (D) $\sqrt{\frac{GM}{4d}}$

37. An engine approaches a vertical cliff with constant speed 72 km/hour. When the engine is at a distance of 0.7 km from the cliff, it blows a whistle. The driver hears the echo after a time (Speed of sound in air is 330 m/s.)

(A) 3.88 S (B) 4.00 S (C) 4.12 S (D) 4.24 S

38. A vessel contains a liquid–1 of density 0.8 gm/cm^3 over a liquid–2 of density 13.6 gm/cm^3. The two liquids are immiscible. A homogeneous solid sphere floats with half of its volume immersed in liquid–1 and other half in liquid–2. The density of the material of the sphere in gm/cm^3 is

(A) 3.3 (B) 6.4 (C) 7.2 (D) 12.8

39. One fine morning, Mr. Ravi visited Gandhi park with his grandson. When he was just on a bridge over the lake in the park, an old wooden toy 'just' dropped from his hand. The toy went straight down to hit surface of calm water, then sinked into water to a certain depth below water surface and returns back due to upthrust of water to the hands of Mr. Ravi in the same position from where it was dropped. Assuming this position to be at height 19.6 meter above the surface of water, and density of material of toy to be just half the density of water in lake, the total time in which toy is received back to the hand of Mr. Ravi is calculated to be

(A) 2 second (B) 4 second (C) 8 second (D) 16 second

40. Two plane mirrors OA and OB are inclined at an angle θ as shown in figure. A ray of light incident parallel to BO strikes the mirror OA at point P. It gets reflected from mirror OA and then reflected from the mirror OB, the ray finally emerges parallel to OA. The value of angle θ is

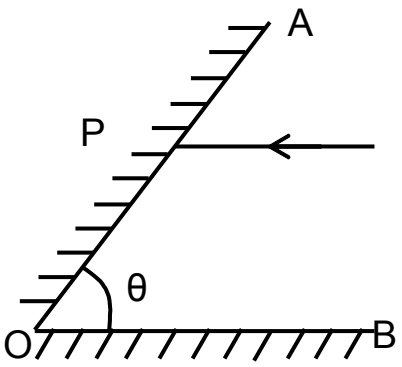

(A) 90^0 (B) 60^0 (C) 45^0 (D) 30^0

41. A long solenoid of length 2 m and radius 10 cm having 2000 turns per meter carries a current of 1.0 A. The strength of magnetic field **(B)** is maximum at point

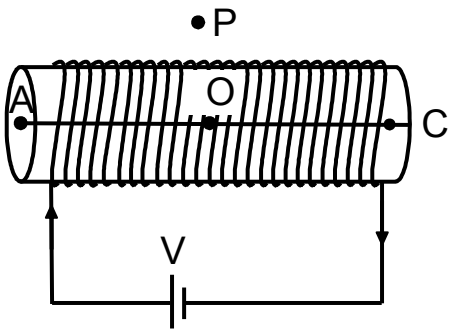

(A) A at the left end
(B) C at the right end
(C) O at the centre of solenoid
(D) P outside the solenoid

42. A tank with a square base of area 2.0 meter^2 is divided by a vertical partition in the middle. The bottom of the partition has a small hinged door of area 10 cm^2. The tank is filled with water in one compartment and a liquid of relative density 1.8 in other compartment, both to a height 5.0 meter. The force necessary to keep the door close is approximately (g = 9.8 m/s^2)

(A) 0.04 N
(B) 3.9 N
(C) 39 N
(D) Zero

43. An electron is projected horizontally towards east in uniform magnetic field B. The electron is deflected towards north by the magnetic field. The magnetic field is directed

(A) East wards
(B) West wards
(C) Upward
(D) Downward

44. Sir CV Raman announced the discovery of Raman Effect on February 28, 1928. He received 1930 Nobel Prize in Physics for this discovery. Raman Effect is the discovery of

(A) Dispersion of light
(B) Total Internal Reflection of light
(C) Refraction of light
(D) Inelastic scattering of light

45. Figures (i) to (v) show graphical representation of motion in one-dimension. Here s, v, a and t represent the displacement, the velocity, the acceleration and the time respectively.

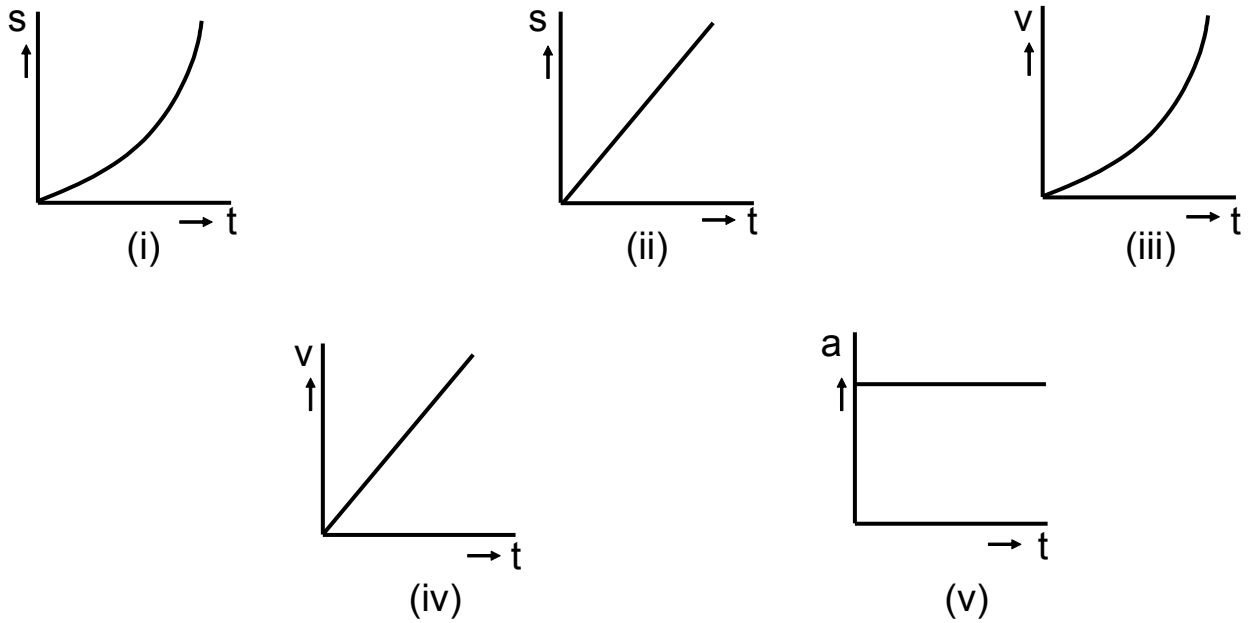

Which of the above graphs represent uniform motion?

(A) (i) only (B) (ii) only (C) (i) (iv) and (v) (D) (iv) and (v)

46. Three identical electric bulbs A, B and C having specification 60 W, 220 V are connected across a 220 V supply as shown. The total power dissipated in three bulbs is close to

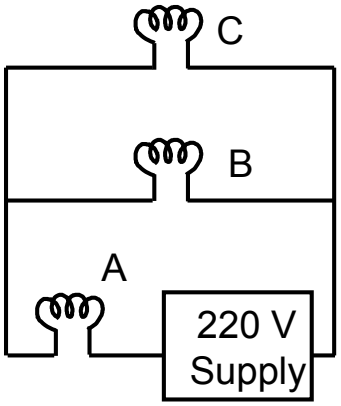

(A) 180 W (B) 60 W (C) 30 W (D) 40 W

47. A copper wire is stretched to decrease its radius by 0.15%. The percentage change in the resistance of wire is

(A) +0.3% (B) −0.3 % (C) +0.6% (D) −0.6 %

48. Speed of sound in air is directly proportional to square root of absolute temperature of air (keeping other parameters constant). The speed of sound in air at 273 K and 1 atom is 332 m/s.

On a clear day, when temperature in the laboratory was 27^0C, an experiment was performed to measure speed of sound in air in the laboratory. The measured value comes out to be 352 m/s. the percentage error in this measurement is

(A) 0.2% (B) 1.15% (C) 3.15% (D) 6.02%

PART A-2 · ONE OR MORE CORRECT OPTIONS

Q. 49 – 60 · 6 marks only if all correct options are marked · no negative marking

49. Which of the following evolutionary lineages of man can be categorized under pre-historic man ?

(A) *Ramapithecus*
(B) *Homo habilis*
(C) *Homo sapiens fossilis*
(D) *Homo heidelbergensis*

50. Select the set of diseases caused by deficiency of B-Complex Vitamins:

(A) Beri-Beri & Pelagra
(B) Dermatitis & Wernicke-Korsakoff Syndrome
(C) Cheilosis & Pernicious anaemia
(D) Marasmus & Kwashiorkor

51. After rainy season, a Biology teacher took the students on a plant collection tour. From a pond, they collected a beaker of water with aquatic plants in it. The students are likely to find which of the following organisms in it?

(A) *Spirogyra, Azolla, Riccia fluitans & Cosmarium*
(B) *Ulothrix, Chlorella, Chara & Ricciocarpus natans*
(C) *Marchantia, Funaria, Lycopodium & Gnetum*
(D) *Salvinia molesta, Azolla, Chlorella & Cladophora*

52. Various parts of mammalian uriniferous tubules (nephrons), play an important role in Urine formation through processes like ultrafilteration, selecitve reabsorption by active transport, reabsorption by passive osmosis and secretion. While the filterate flows through different parts of the uriniferous tubules (**Numbered 1 – 6 in the diagram given below**), not only its volume is reduced but its composition is also considerably changed, due to exchange of materials between the filterate and the blood of the peritubular capillaries.

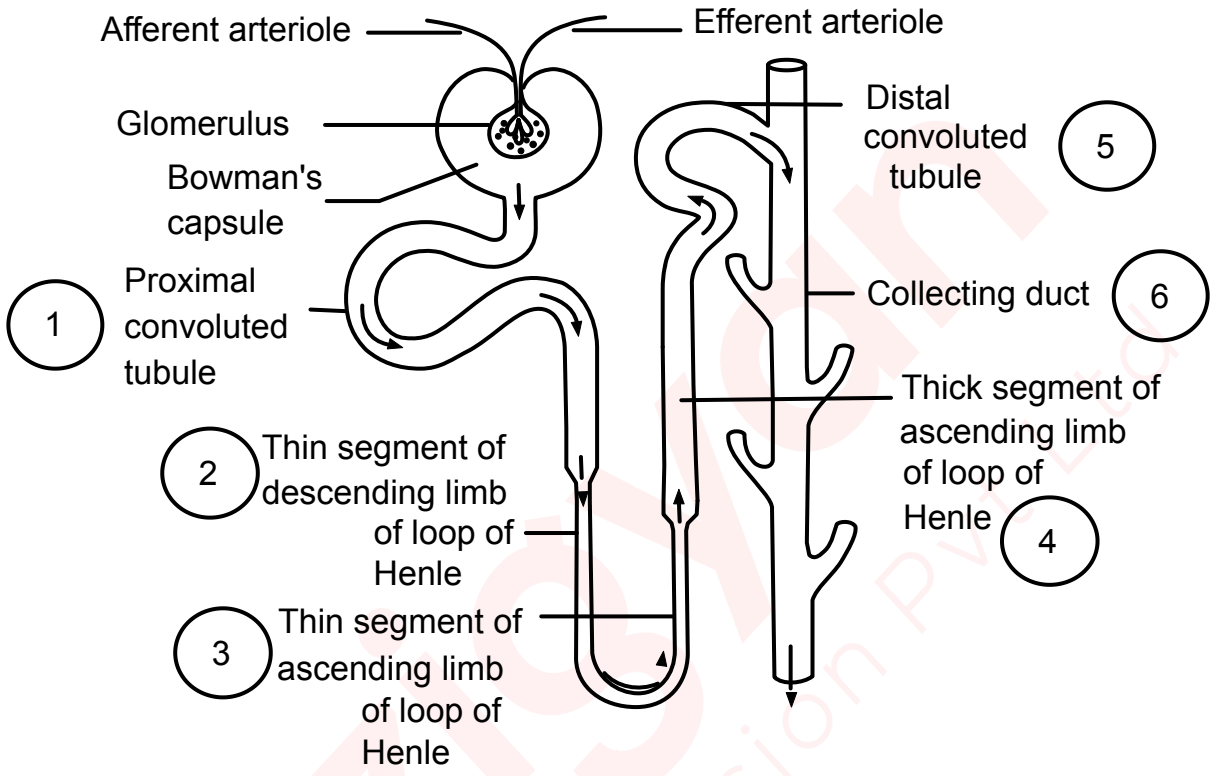

From among the **numbered parts (1 - 6)** in the above diagram, the options are given in a manner that they highlight two aspects separately, i.e., part(s) having columnar epithelial cells with 'brush border', suitable for reabsorption and those parts completely or poorly permeable to water. Select-out the desired options:

(A) 4, 5 (B) 1 (C) 2, 3 (D) 2, 3, 6

53. The 0.01 M NH_4Cl solution at 25^0C has:

(A) $[Cl^-_{aq}] < 10^{-2}$ M

(B) $[NH_4{}^+_{aq}] < 10^{-2}$M

(C) pOH > 7

(D) $[H^+] > 10^{-7}$M

54. Amphoteric nature of Al_2O_3 is employed in which of the following process/es?

(A) Bayer's process (B) Hall's process (C) Serpek's process (D) Dow's process

55. As a general trend the First Ionization Energy (IE_1) of elements decreases on moving down in a group in the periodic table. Keeping the observation in mind select the correct order of elements with respect to their IE_1

I. Li > Na > K > Rb > Cs > Fr

II. Li > Na > K > Rb > Cs < Fr

III. Sr < Ba > Ra

IV. Sr > Ba < Ra

V. Cu > Ag > Au

VI. Cu > Ag < Au

VII. Cd > Hg

VIII. Cd < Hg

(A) I, V, VII (B) II, IV, VIII (C) III, V, VII (D) II, VI, VIII

56. Two containers each containing water in liquid state are connected by a valve as shown in diagram

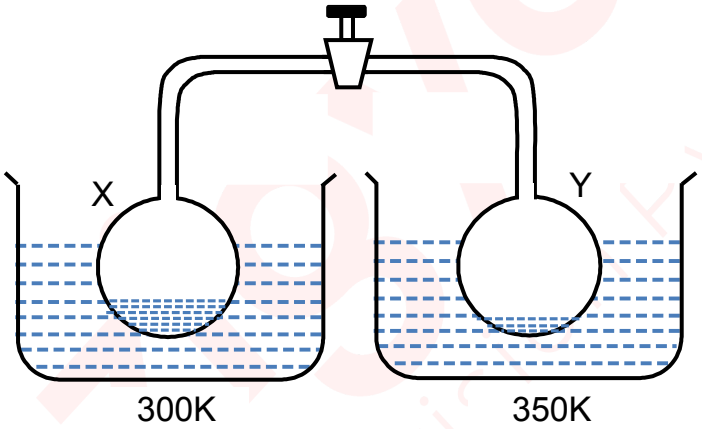

Given that vapour pressure of water at 300 K and 350 K are 22 torr and 40 torr, select correct statement(s):

(A) The final pressure in each container after the valve is opened, while keeping the containers at their respective temperatures, is equal but more than 22 torr.

(B) The final pressure in each container after the valve is opened, while keeping the containers at their respective temperatures, is 40 torr.

(C) Mass of water is decreased in container X.

(D) Mass of water is decreased in container Y.

57. Two blocks M_1 and M_2 of masses 3 kg and 6 kg respectively are connected through a string and spring balance B_1. The string passes over a massless and frictionless pulley P. The pulley is suspended from a rigid support through spring balance B_2. Strings are massless and inextensible. Masses of spring balances are negligible. The system is released from rest. At the instant when masses M_1 and M_2 are moving with same speed ($g = 9.8$ m/sec^2)

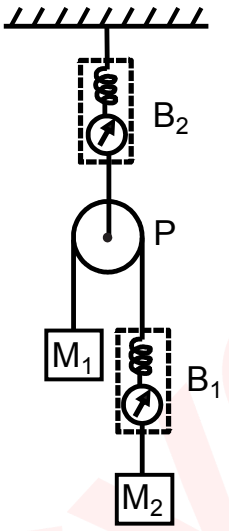

(A) reading of B_1 is 4.5 kg wt.

(B) reading of B_1 is 4.0 kg wt.

(C) reading of B_2 is 9.8 kg wt.

(D) acceleration of M_1 is $\frac{9.8}{3}$ mS^{-2}

58. Focal length of a thin convex lens is 10 cm. An object is placed at a distance 15 cm in front of the lens and a plane mirror is kept at 20 cm on the other side as shown in figure.

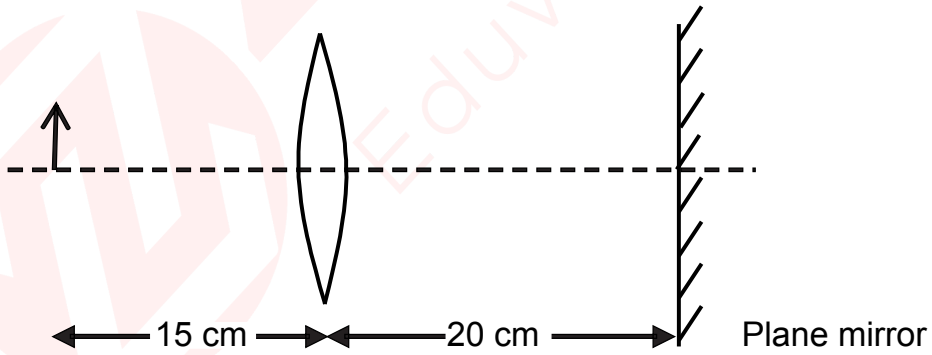

(A) The final image is formed at distance 10 cm from lens towards the mirror

(B) The final image is formed at a distance 30 cm from lens means 10 cm behind the mirror

(C) The final image has magnification m = −2

(D) The final image has magnification m = +2

59. Given network of 18 resistors, each equal to R = 3 ohm, is connected in series with resistor R_0 to a source of emf = 9 volt. Choose the correct option.

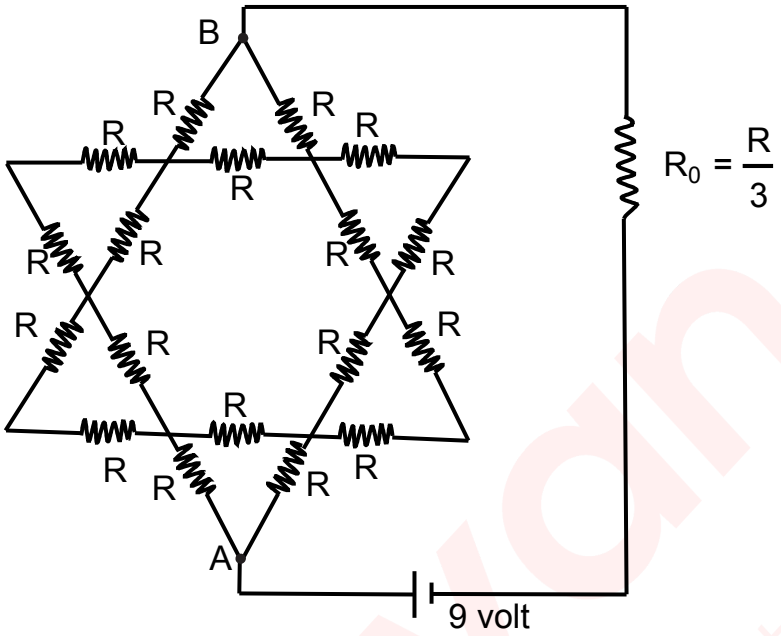

(A) Current drawn from battery is 1.5 A

(B) Potential difference between A and B is 7.5 V

(C) Electrical power dissipated in R_0 is 2.25 watt

(D) Electrical power dissipated in network between A and B is 12.25 watt.

60. Two bodies of masses m_1 = 2 kg and m_2 = 1 kg are moving towards each other in the same straight line with speed 12 m/s and 6 m/s respectively as shown in figure. The bodies can be assumed as point masses. After some time, the two bodies undergo elastic collision. After the collision



(A) the two bodies mearly exchange their velocities

(B) m_1 comes to rest

(C) m_2 moves with speed 18 m/s towards right

(D) m_1 and m_2 move with same speeds but they reverse their directions of motion.

ANSWER KEY

NSEJS 2022 · PAPER CODE 51

60
QUESTIONS · 216 MARKS

IAPT final answer key for paper code 51. ★ marks an answer given as per Zigyan.

1	(D)	2	(B)	3	(C)	4	(A)★	5	(A)
6	(A)	7	(B)	8	(B)	9	(C)	10	(C)
11	(C)★	12	(D)	13	(A)	14	(C)	15	(C)
16	(A)	17	(D)	18	(A)★	19	(B)	20	(C)
21	(A)	22	(C)	23	(B)	24	(D)	25	(C)
26	(C)	27	(A)	28	(C)	29	(C)	30	(B)
31	(A)	32	(D)	33	(B)	34	(C)	35	(A)
36	(A)	37	(B)	38	(C)	39	(C)	40	(B)
41	(C)	42	(C)	43	(C)	44	(D)	45	(B)★
46	(D)★	47	(C)★	48	(B)★	49	(B), (C), (D)★	50	(A), (B), (C)
51	(A), (B), (D)	52	(A), (B)★	53	(B), (C), (D)	54	(A), (B)★	55	(B), (D)★
56	(D)★	57	(B), (D)★	58	—★	59	(A), (B), (C)	60	(B), (C)

★ Answers as per Zigyan

- **Q4** — As per Zigyan: (A); IAPT key (A).
- **Q11** — As per Zigyan: (C); IAPT key (C).
- **Q18** — As per Zigyan: (A); IAPT key (B).
- **Q45** — As per Zigyan: (B); dropped by IAPT.
- **Q46** — As per Zigyan: (D); dropped by IAPT.
- **Q47** — As per Zigyan: (C); dropped by IAPT.
- **Q48** — As per Zigyan: (B); dropped by IAPT.
- **Q49** — As per Zigyan: (B), (C), (D); IAPT key (B), (D).
- **Q52** — As per Zigyan: (A), (B); IAPT key (B), (D).
- **Q54** — As per Zigyan: (A), (B); dropped by IAPT.
- **Q55** — As per Zigyan: (B), (D); dropped by IAPT.
- **Q56** — As per Zigyan: (D); dropped by IAPT.
- **Q57** — As per Zigyan: (B), (D); dropped by IAPT.
- **Q58** — As per Zigyan: no option is correct; IAPT key (A), (C).

zigyan

OLYMPIADS · 2026

Olympiad results



TOP ACHIEVEMENT · CHEMISTRY

Qualified the Chemistry Olympiad twice, and selected for the HBCSE camp.

Saksham Bishnoi reached the national stage of the Chemistry Olympiad in two consecutive years and was selected for the Orientation-cum-Selection Camp at HBCSE, Mumbai. 4 Years Classroom - the same student who took AIR 168 in JEE Advanced 2026.

Qualified twice | HBCSE selection camp | Only student from Faridabad

Above MAS means above the **Minimum Admissible Score**: clearing it puts a student in the national band for their subject. It is a real threshold, not a participation marker.

CHEMISTRY · ABOVE MAS



Sulokya Bibhuty
Class XII
3 Years Classroom
Above MAS



Anay Gupta
Class XI
3 Years Classroom
Above MAS



Akshat Khator
Class XI
3 Years Classroom
Above MAS



Harshit Goyal
Class XII
4 Years Classroom
Above MAS



Hardik Sharma
Class XI
3 Years Classroom
Above MAS



Aarush Kumar
Class XII
1 Year Classroom
Above MAS

PHYSICS · ASTRONOMY · MATHEMATICS

PHYSICS



Sulokya Bibhuty
Class XII
3 Years Classroom
Above MAS

PHYSICS



Saksham Bishnoi
Class XII
4 Years Classroom
Above MAS

ASTRONOMY



Sulokya Bibhuty
Class XI
3 Years Classroom
Above MAS

MATHEMATICS · IOQM



Priyanshi
Class XI
4 Years Classroom
IOQM Qualifier

OLYMPIADS WE PREPARE STUDENTS FOR

NSEP	NSEC	NSEB	NSEA	IOQM	NSEJS
Physics	Chemistry	Biology	Astronomy	Mathematics	Class X and below

The olympiad pathway starts in Class 8.

NSEJS is open to Class 10 and below - the habit of staying with one hard problem is the one JEE Advanced rewards.

Zigyan Eduvision Pvt. Ltd. · SCO No. 107, Sector 16, Faridabad 121002
0129-4048800 · +91 92115 38800 · info@zigyan.com

zigyan

RESULTS · 2021 – 2026

Our toppers, year by year

40
JEE Advanced selections in 6 years

AIR 168
best rank — Saksham Bishnoi, 2026

16 of 35
students selected, JEE Advanced 2026

14 of 35
above 98 percentile, JEE Main 2026

JEE ADVANCED SELECTIONS PER YEAR

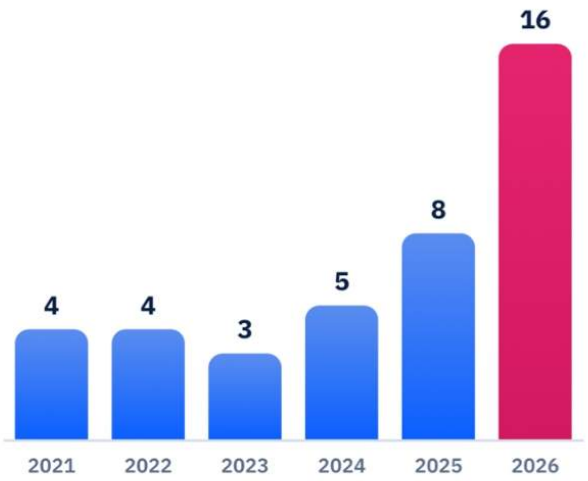

BEST RANK EACH YEAR

YEAR	JEE ADVANCED	JEE MAIN
2026	**Saksham Bishnoi** AIR 168 · 4 Years Classroom	**Saksham Bishnoi** AIR 811 · 99.95 %ile
2025	**Chakshu** AIR 4,233 · 2 Years Classroom	**Chakshu** AIR 8,538 · 99.44 %ile
2024	**Harshit** AIR 777 · 2 Years Classroom	**Harshit** AIR 1,473 · 99.91 %ile
2023	**Aditya Jain** AIR 2,373 · 2 Years Classroom	**Aditya Jain** AIR 2,503 · 99.79 %ile
2022	**Rachit Sharma** AIR 698 · 1 Year Classroom	**Rachit Sharma** AIR 1,016 · 99.90 %ile
2021	**Sparsh Mittal** AIR 2,237 · 1 Year Classroom	**Sparsh Mittal** AIR 1,562

JEE ADVANCED 2026 — THIRTEEN NAMED SELECTIONS



Saksham Bishnoi
AIR 168
4 Years Classroom



Sulokya Bibhuty
AIR 1,315
3 Years Classroom



Aarush
AIR 2,699
1 Year Classroom



Manishka
AIR 2,869
4 Years Classroom



Oojit Kumar
AIR 5,765
4 Years Classroom



Harshit Goyal
AIR 6,407
4 Years Classroom



Pranab Sharma
AIR 6,750
3 Years Classroom



Aditya Dhar
AIR 15,183
3 Years Classroom



Arpit Anshuman
AIR 19,308
4 Years Classroom



Lokesh
AIR 22,857
3 Years Classroom



Arjun
AIR 24,674
3 Years Classroom



Sanyam Gulyani
AIR 25,123
1 Year Classroom



Saket
AIR 27,628
3 Years Classroom

Sixteen students of the 2026 batch were selected in JEE Advanced; the thirteen above are named with their All India Rank.

JEE MAIN 2026 — TOP SIX, WITH PERCENTILE



Saksham Bishnoi
AIR 811
99.95 %ile
4 Years Classroom



Sulokya Bibhuty
AIR 1,095
99.94 %ile
3 Years Classroom



Harshit Goyal
AIR 2,662
99.83 %ile
4 Years Classroom



Manishka
AIR 4,817
99.70 %ile
4 Years Classroom



Oojit Kumar
AIR 5,040
99.69 %ile
4 Years Classroom



Aarush
AIR 5,276
99.67 %ile
1 Year Classroom

14 of the 35 students in the 2026 batch scored above the 98th percentile in JEE Main.

Zigyan Eduvision Pvt. Ltd. · SCO No. 107, Sector 16, Faridabad 121002
0129-4048800 · +91 92115 38800 · info@zigyan.com