zigyan

PREVIOUS YEAR PAPER · 2019

OLYMPIAD · STAGE I

NSEP

National Standard Examination in Physics

2019

Question paper with official answer key

70	240	120 min	61
Questions	Maximum marks	Time	Paper code

Question paper and official answer key: Indian Association of Physics Teachers (IAPT), NSEP 2019, paper code 61.
Solutions and notes: Zigyan. This booklet is not an IAPT publication.

Prepare for the Olympiads with Zigyan

www.zigyan.com

zigyan

SCO No. 107, Sector 16, Faridabad, Haryana 121002
0129-4048800 · +91 92115 38800 · info@zigyan.com

zigyan

JEE 2026 RESULTS

OUR TOPPERS

When talent meets the right guidance.

Saksham Bishnoi and Sulokya Bibhuty - our JEE 2026 toppers from Zigyan, Sector 16 - with the programme they took and the rank they earned.



Rahul Kaushik Sir
Founder & Director, Zigyan Eduvision
23 years of teaching



Saksham Bishnoi

4 YEARS CLASSROOM

JEE ADVANCED 2026	JEE MAIN 2026
AIR 168	AIR 811
	99.95 percentile



Sulokya Bibhuty

3 YEARS CLASSROOM

JEE ADVANCED 2026	JEE MAIN 2026
AIR 1,315	AIR 1,095
	99.94 percentile

OLYMPIAD RESULTS

Above the Minimum Admissible Score - the national band for the subject

CHEMISTRY

- Sulokya Bibhuty — 3 Years Classroom
- Anay Gupta — 3 Years Classroom
- Akshat Khator — 3 Years Classroom
- Harshit Goyal — 4 Years Classroom
- Hardik Sharma — 3 Years Classroom
- Aarush Kumar — 1 Year Classroom

PHYSICS

- Sulokya Bibhuty — 3 Years Classroom
- Saksham Bishnoi — 4 Years Classroom

ASTRONOMY

- Sulokya Bibhuty — 3 Years Classroom

MATHEMATICS (IOQM)

- Priyanshi — 4 Years Classroom

Saksham Bishnoi qualified the Chemistry Olympiad twice and was selected for the Orientation-cum-Selection Camp at HBCSE, Mumbai.

16 selections	16 of 35	AIR 168
in JEE Advanced 2026	students of the batch selected	best JEE Advanced rank

Start where they started.

Register for ZEST - ₹200 · www.zigyan.com/scholarship/zest

+91 92115 38800
info@zigyan.com

Given in the question paper

Physical constants you may need….

Magnitude of charge on electron $e = 1.60\times10^{-19}$ C	Boiling point of hydrogen = 20.3K
Mass of electron $m_e = 9.10\times10^{-31}$kg	Boiling point of helium = 4.2K
Mass of proton $m_p = 1.67\times10^{-27}$kg	Boiling point of nitrogen = 77.4K
Acceleration due to gravity $g = 9.8$ ms^{-2}	Boiling point of oxygen = 90.19K
Universal gravitational constant $G = 6.67\times10^{-11}$ Nm^2/Kg^2	Permittivity of free space $\varepsilon_0 = 8.85\times10^{-12}$ C^2 / Nm^2
Universal gas constant $R = 8.31$ J / mol K	Permeability of free space $\mu_0 = 4\pi\times10^{-7}$ H/m
Boltzmann constant $k = 1.38\times10^{-23}$ J / K	Planck's constant $h = 6.62\times10^{-34}$ Js
Stefan's constant $\sigma = 5.67\times10^{-8}$ W / m^{2}K^4	Faraday constant = 96,500C / mol
Rydberg constant $R = 1.097\times10^{7}$ m^{-1}	

PART A-1 · ONE CORRECT OPTION

Q. 1 – 60 · +3 for a correct answer, –1 for a wrong one

1. An observer stands on the platform at the front edge of the first bogie of a stationary train. The train starts moving with uniform acceleration and the first bogie takes 5 seconds to cross the observer. If all the bogies of the train are of equal length and the gap between them is negligible, the time taken by the tenth bogie to cross the observer is

(A) 1.07s (B) 0.98s (C) 0.91s (D) 0.81s

2. The resistive force on an aeroplane flying in a horizontal plane is given by $F_f = kv^2$, where k is constant and v is the speed of the aeroplane. When the power output from the engine is P_0, the plane flies at a speed v_0. If the power output of the engine is doubled the aeroplane will fly at a speed of

(A) 1.12 v_0 (B) 1.26 v_0 (C) 1.41 v_0 (D) 2.82 v_0

3. A 3.0 cm thick layer of oil (density ρ_{oil} = 800 kg/m^3) floats on water (density ρ_w = 1000 kg/m^3) in a transparent glass beaker. A solid cylinder is observed floating vertically with $\frac{1}{3}$ of it in water and $\frac{1}{3}$ in the oil. Oil is gently poured into the beaker until the cylinder floats in oil only. The fraction of the solid cylinder in oil now is

(A) $\frac{3}{5}$ (B) $\frac{2}{3}$
(C) $\frac{3}{4}$ (D) $\frac{8}{9}$

4. A wedge of mass M rests on a horizontal frictionless surface. A block of mass m starts sliding down the rough inclined surface of the wedge to its bottom. During the course of motion, the centre of mass of the block and the wedge system

(A) does not move at all
(B) moves horizontally with constant speed
(C) moves horizontally with increasing speed
(D) moves vertically with increasing speed

5. A uniform circular disc rotating at a fixed angular velocity ω about an axis normal to its plane and passing through its centre has kinetic energy E. If the same disc rotates with an angular velocity 2ω about a parallel axis passing through the edge, its kinetic energy will be

(A) 2 E (B) 4 E (C) 10E (D) 12 E

zigyan Eduvision Pvt Ltd

6. In the following figures the velocity-time graphs for three particles 1, 2 and 3 are shown.

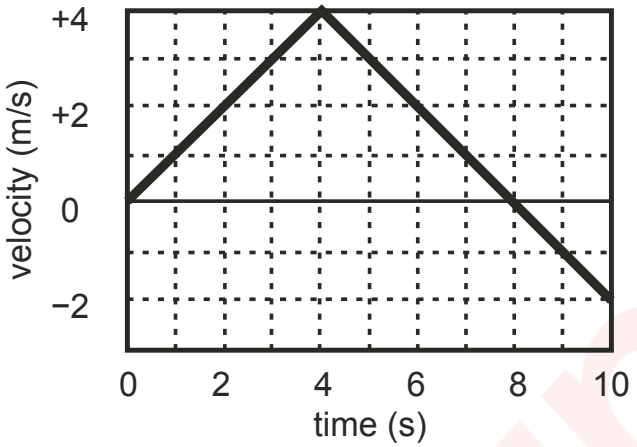

Particle 1

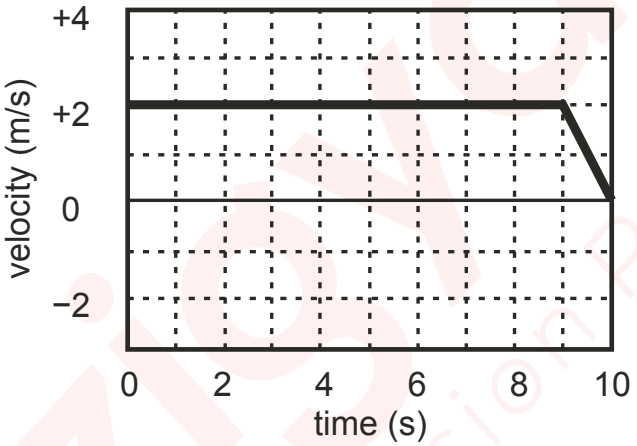

Particle 2

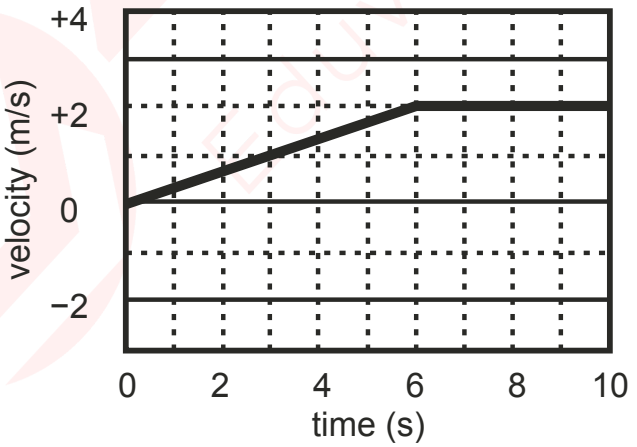

Particle 3

The magnitude of average acceleration of the three particles, over 10 s, bear the relationship

(A) $a_1 > a_2 > a_3$ (B) $a_2 > a_1 > a_3$ (C) $a_3 > a_2 > a_1$ (D) $a_1 = a_2 = a_3$

7. The potential energy (U) of a particle moving in a potential field varies with its displacement (x) as shown below.

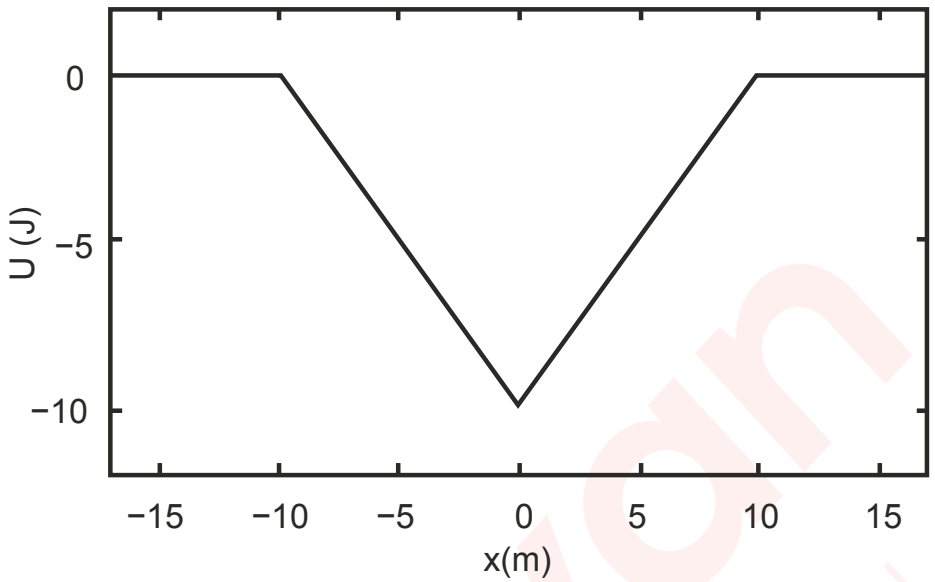

The variation of force F(x) acting on the particle as a function of x can be represented by

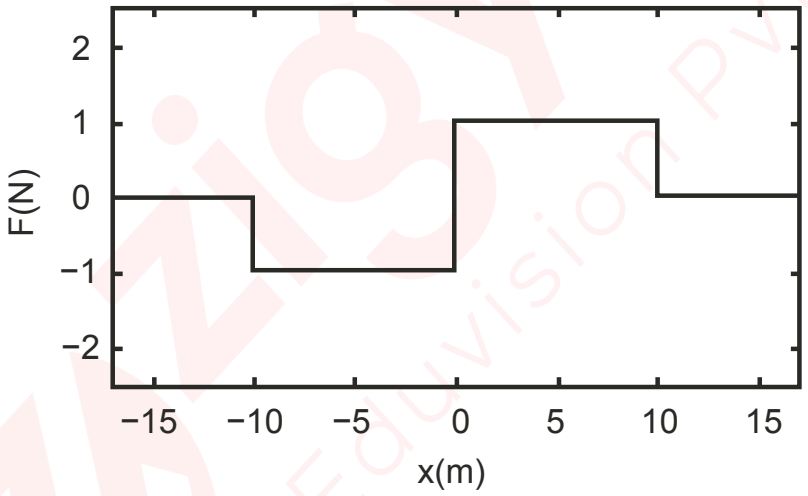

(Fig i)

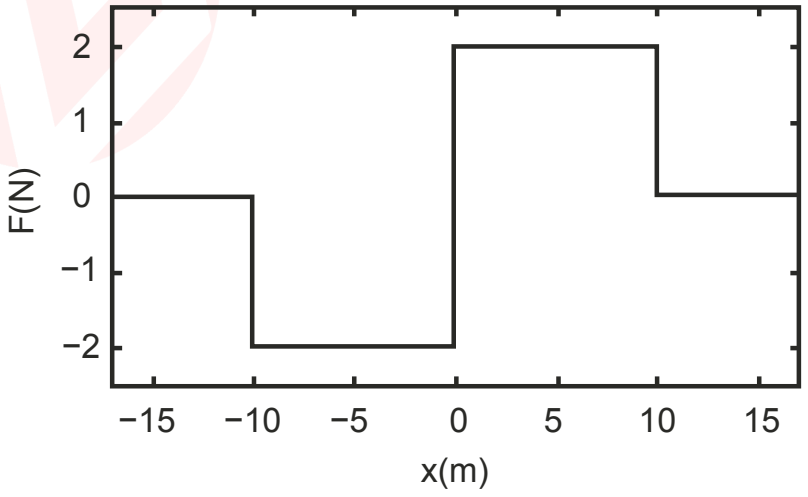

(Fig ii)

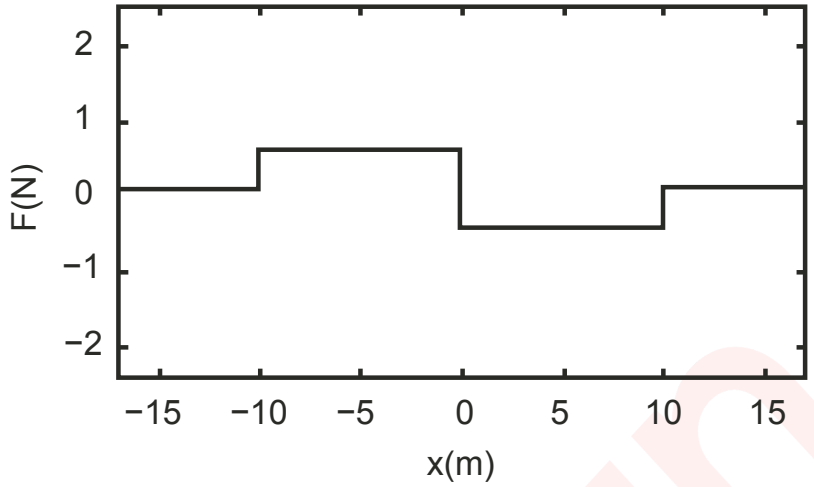

(Fig iii)

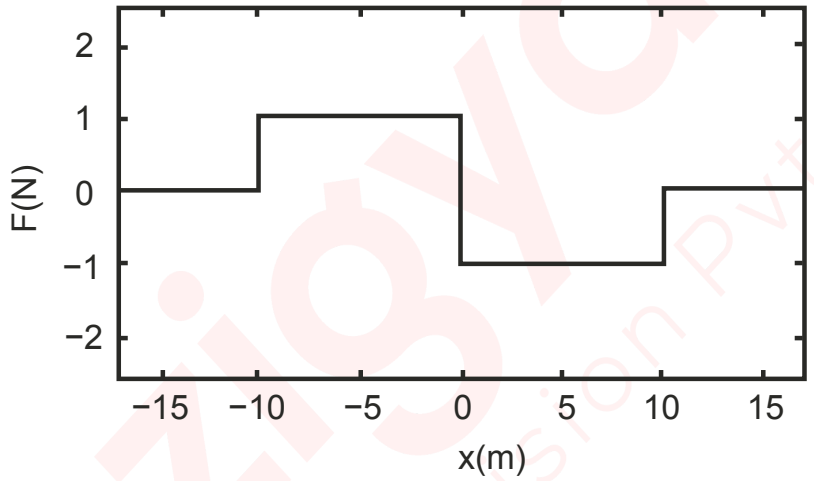

(Fig iv)

(A) Fig (i) (B) Fig (ii) (C) Fig (iii) (D) Fig (iv)

8. A pendulum is made by using a thread of length 300 cm and a small spherical bob of mass 100 g. It is suspended from a point S. The bob is pulled from its position of rest at O to the point A so that the linear amplitude is 25 cm. The angular amplitude in radian and the potential energy of the bob in joule at A are respectively

(A) 0.10 and 0.10 (B) 0.083 and 0.01 (C) 0.251 and 2.94 (D) 0.083 and 0.24

9. Consider the following physical expressions

(I) ρv^2 (ρ: density, v: velocity)

(II) $\frac{Y\Delta L}{L}$ (Y: Young's modulus, L: length)

(III) $\frac{\sigma^2}{\varepsilon_0}$ (σ: surface density of charge)

(IV) $h\rho rg$ (h: rise of a liquid in a capillary tube of radius r)

The expressions having same dimensional formula are

(A) I and II only (B) II and III only

(C) II, III and IV only (D) I, II and III only

10. Two simple pendulums of lengths 1.44 m and 1.0 m start swinging together in the same phase. The two will be in phase again after a time of

(A) 6 second (B) 9 second (C) 12 second (D) 25 second

11. A home aquarium partly filled with water slides down an inclined plane of inclination angle θ with respect to the horizontal. The surface of water in the aquarium

(A) remains horizontal.

(B) remains parallel to the plane of the incline.

(C) forms an angle α with the horizon where $0 < \alpha < \theta$

(D) forms an angle α with horizon, where $\theta < \alpha < 90$

12. A sound source of constant frequency travels with a constant velocity past an observer. When it crosses the observer the sound frequency sensed by the observer changes from 449 Hz to 422 Hz. If the velocity of sound is 340 m/s, the velocity of the source of sound is

(A) 8.5 m/s (B) 10.5 m/s (C) 12.5 m/s (D) 14.5 m/s

13. Light of wavelength 640 nm falls on a plane diffraction grating with 12000 lines per inch. In the diffraction pattern on a screen kept at a distance of 12 cm from the grating, the distance of the second order maximum from the central maximum is

(A) 1.81 cm (B) 2.41 cm (C) 3.62 cm (D) 7.25 cm

14. If the force acting on a body is inversely proportional to its speed, the kinetic energy of the body varies with time t as

(A) t^0 (B) t^1 (C) t^2 (D) t^{-1}

15. As shown in the figure, a block of mass m is hung from the ceiling by the system of springs consisting of two layers. The force constant of each of the springs is k. The frequency of the vertical oscillations of the block is

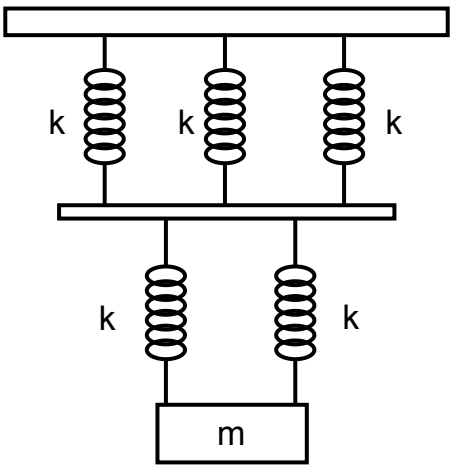

(A) $\frac{1}{2\pi}\sqrt{\frac{k}{5m}}$ (B) $\frac{1}{2\pi}\sqrt{\frac{4k}{5m}}$

(C) $\frac{1}{2\pi}\sqrt{\frac{5k}{6m}}$ (D) $\frac{1}{2\pi}\sqrt{\frac{6k}{5m}}$

16. Two simple harmonic motions are given by x_1 = a sin ωt + a cos ωt and $x_2 = a\sin\omega t + \frac{a}{\sqrt{3}}\cos\omega t$ The ratio of the amplitudes of the first to the second and the phase difference between them respectively are

(A) $\sqrt{\frac{3}{2}}$ and $\frac{\pi}{12}$ (B) $\frac{\sqrt{3}}{2}$ and $\frac{\pi}{12}$

(C) $\frac{2}{\sqrt{3}}$ and $\frac{\pi}{12}$ (D) $\sqrt{\frac{3}{2}}$ and $\frac{\pi}{6}$

17. A particle is projected from the ground with a velocity $\vec{v} = \left(3\hat{i} + 10\hat{j}\right)$ ms^{-1}. The maximum height attained and the range of the particle are respectively given by (use g = 10 m/s^2)

(A) 5m and 6 m (B) 3m and 10 m (C) 6m and 5 m (D) 3m and 5 m

18. A 20 cm long capillary tube stands vertically with lower end just in water. Water rises up to 5 cm. If the entire system is now kept on a freely falling platform, the length of the water column in the capillary tube will be

(A) 5 cm (B) 10 cm (C) Zero (D) 20 cm

19. Position-time graph of a particle moving in a potential field is shown beside. If the mass of the particle is 1 kg its total energy is approximately

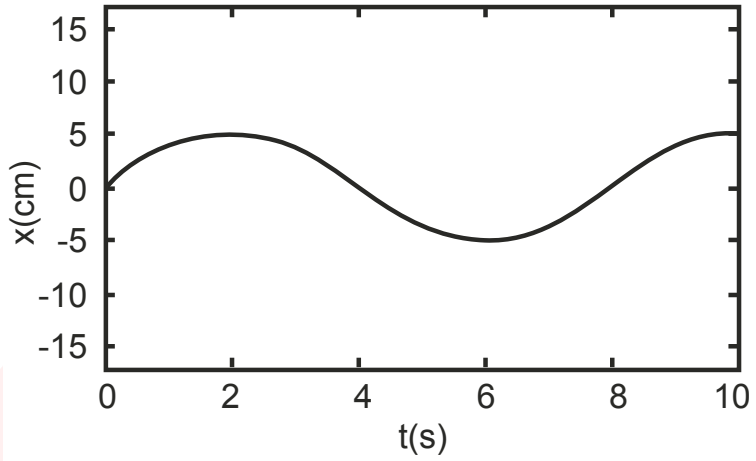

(A) 15.45×10^{-4} J (B) 30.78×10^{-4} J (C) 7.71×10^{-4} J (D) 3.85×10^{-4} J

20. Plots of intensity (I) of radiation emitted by a black body versus wavelength (λ) at three different temperatures T_1, T_2 and T_3 respectively are shown in figure. Choose the correct statement.

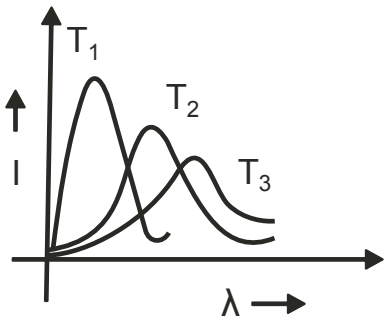

(A) $T_1 > T_2 > T_3$ necessarily

(B) $T_3 > T_2 > T_1$ necessarily

(C) $T_2 = (T_1 + T_3)/2$ necessarily

(D) $T_2^2 = T_1 T_3$ necessarily

21. Consider a composite slab consisting of two different materials having equal thickness and equal area of cross-section. The thermal conductivities are K and 2K respectively. The equivalent thermal conductivity of the composite slab is

(A) $\frac{2K}{3}$

(B) $\sqrt{2}\ K$

(C) 3K

(D) $\frac{4K}{3}$

22. A large horizontal uniform disc can rotate freely about a rigid vertical axis passing through its centre O. A man stands at rest at the edge of the disc at a point A. The mass of the disc is 22 times the mass of the man. The man starts moving along the edge of the disc. When he reaches A, after completing one rotation relative to the disc, the disc has turned through

(A) 30°

(B) 90°

(C) 60°

(D) 45°

23. Two factories are sounding their sirens at 400 Hz each. A man walks from one factory towards the other at a speed of 2 m/s. The velocity of sound is 320 m/s. The number of beats heard by the person in one second will be

(A) 6

(B) 5

(C) 4

(D) 2.5

24. The temperature of an isolated black body falls from T_1 to T_2 in time t. Then, t = C x where x is

(A) $\left(\frac{1}{T_2} - \frac{1}{T_1}\right)$

(B) $\left(\frac{1}{T_2^2} - \frac{1}{T_1^2}\right)$

(C) $\left(\frac{1}{T_2^3} - \frac{1}{T_1^3}\right)$

(D) $\left(\frac{1}{T_2^4} - \frac{1}{T_1^4}\right)$

25. Two charges – q and – q are placed at points (0, d) and (0, – d). A charge +q, free to move along X axis, will oscillate with a force proportional to

(A) $\frac{1}{x^2 + d^2}$

(B) $\frac{1}{x^2}$

(C) $\frac{x}{\left(d^2 + x^2\right)^{3/2}}$

(D) $\frac{1}{\sqrt{x^2 + d^2}}$

26. The average translational kinetic energy of oxygen (M = 32) molecules at a certain temperature is 0.048 eV. The translational kinetic energy of nitrogen (M = 28) molecules at the same temperature is (consider the two gases to be ideal)

(A) 0.0015 eV (B) 0.042 eV (C) 0.048 eV (D) 0.768 eV

27. The log-log graph for a non-linear oscillator is shown below. Assuming the constants to have appropriate dimensions the relationship between time period (T) and the amplitude (A) can be expressed as

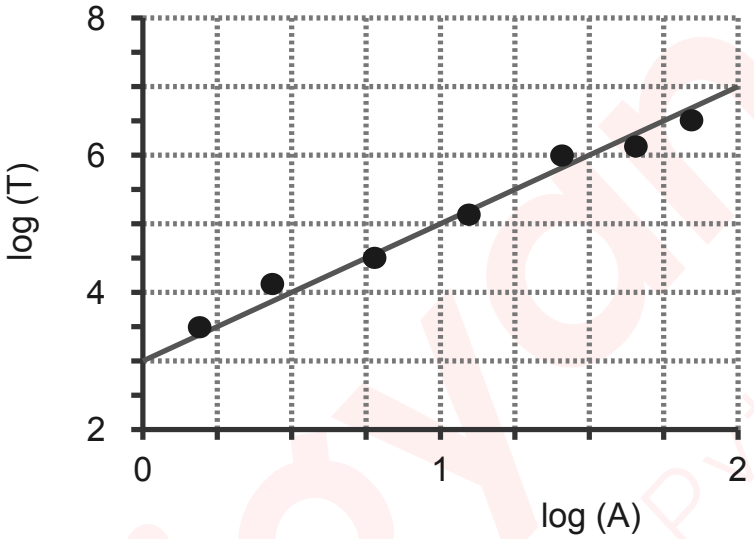

(A) $T = 1000A^2$ (B) $T = 4A^{1/2}$ (C) $T = 4A^2 + B$ (D) $T = 8A^3$

28. In many situations the point source emitting a wave starts moving, through the medium, with velocity V greater than the wave velocity in that medium. In such a case when source velocity (V) > wave velocity (v), the wave front changes

(A) from spherical to plane
(B) from spherical to conical
(C) from plane to spherical
(D) from cylindrical to spherical

29. If the average mass of a smoke particle in an Indian kitchen is 3×10^{-17} kg, the rms speed of the smoke particles at 27^0C is approximately

(A) 2 cm/sec (B) 2 m/sec (C) 2 km/sec (D) none of these

30. Two wires, made of same material, one thick and the other thin are joined to form one composite wire. The composite wire is subjected to the same tension throughout. A wave travels along the wire and passes the point where the two wires are joined. The quantity which changes at the joint are

(A) frequency only.
(B) propagation speed only.
(C) wavelength only.
(D) both propagation speed and wavelength.

31. The frequency of the third overtone of a closed end organ pipe equals the frequency of the fifth harmonic of an open end organ pipe. Ignoring end correction, the ratio of their lengths $l_{open} : l_{close}$ is

(A) 10:7 (B) 10:9 (C) 2:1 (D) 7:10

32. A concave mirror has a radius of curvature R and forms the image of an object placed at a distance 1.5R from the pole of the mirror. An opaque disc of diameter half the aperture of the mirror is placed with the pole at the centre. As a result

(A) the position of the image will be the same but its central half will disappear

(B) the position of the image will be the same but its outer half will disappear

(C) the complete image will be seen at the same position and it will be exactly identical with the initial image

(D) the complete image will be seen at the same position but it will not be identical in all respect with the initial image.

33. A ray of white light is made incident on the refracting surface of a prism such that after refraction at this surface, the green component falls on the second surface at its critical angle. The colours present in the emergent beam will be

(A) violet, indigo and blue.

(B) violet, indigo , blue, yellow, orange and red.

(C) yellow, orange and red.

(D) all colours

34. In a compound microscope, having tube-length 30 cm, the power of the objective and the eye-piece are100D and 10D respectively. Then the magnification produced by the microscope when the final image is at the least distance of distinct vision (25 cm) will be

(A) 55 (B) 64 (C) 77 (D) 90

35. Parallel rays are incident on a glass sphere of diameter 10 cm and having refractive index 1.5. The sphere converges these rays at a certain point. The distance of this point from the centre of the sphere will be

(A) 2.5 cm (B) 5 cm (C) 7.5 cm (D) 12.5 cm

36. A jet of water from 15 cm diameter nozzle of a fire hose can reach the maximum height of 25 m. The force exerted by the water jet on the hose is

(A) 4.24 kN (B) 17.32 kN (C) 2.17 kN (D) 8.66 kN

37. In an electromagnetic wave the phase difference between electric vector and magnetic vector is

(A) zero (B) $\frac{\pi}{2}$

(C) π (D) $\frac{3\pi}{2}$

38. A rectangular slab of glass of refractive index 1.5 is immersed in water of refractive index 1.33 such that the top surface of the slab remains parallel to water level. Light from a point source in air is incident on the surface of water at an angle α such that the light reflected from the glass slab is plane polarised, the angle α is

(A) 84.4° (B) 48.4° (C) 56.3° (D) 53.1°

39. In a spectrometer the smallest main scale division is $\frac{1}{3}$ of a degree. The total number of divisions on the vernier scale attached to the main scale is 60 which coincide with the 59 divisions of the main circular scale. The least count of the spectrometer is

(A) 20' (B) 20" (C) 30" (D) 30'

40. White light is used to illuminate two slits in Young's double sit experiment. Separation between the two slits is b and the screen is at a distance D (>>b) from the plane of slits. The wavelength missing at a point on the screen directly in front of one of the slits is

(A) $\frac{2b^2}{3D}$ (B) $\frac{2b^2}{D}$

(C) $\frac{b^2}{3D}$ (D) $\frac{b^2}{2D}$

41. In an ink-jet printer, an ink droplet of mass m is given a negative charge q by a computer-controlled charging unit. The charged droplet then enters the region between two deflecting parallel plates of length L separated by distance d (see figure below) with a speed v. All over this region there exists a uniform downward electric field E (in the plane of paper). Neglecting the gravitational force on the droplet, the maximum charge that can be given to this droplet, so that it does not hit any of the plates, is

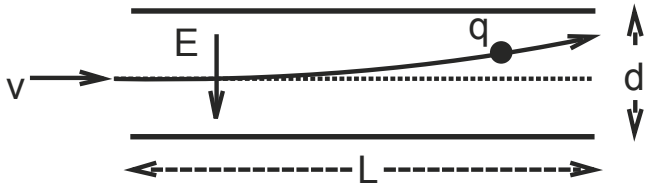

(A) $\frac{mv^2L}{Ed^2}$ (B) $\frac{mv^2d}{EL^2}$

(C) $\frac{md}{Ev^2L^2}$ (D) $\frac{mv^2L^2}{Ed}$

42. A converging beam of light is pointing to P. Two observations are made with (i) a convex lens of focal length 20 cm and,(ii) a concave lens of focal length 16 cm placed in the path of the convergent beam at a distance 12 cm before the point P. It is observed that

(A) in both cases the images are real.

(B) in both cases the images are virtual.

(C) for (i) the image is real and for (ii) the image is virtual.

(D) for (i) the image is virtual and for (ii) the image is real.

43. A spherical capacitor is formed by two concentric metallic spherical shells. The capacitor is then charged so that the outer shell carries a positive charge and the inner shell carries an equal but negative charge. Even if the capacitor is not connected to any circuit, the charge will eventually leak away due to a small electrical conductivity of the material between the shells. What is the character of the magnetic field produced by this leakage current?

(A) Radially outwards from the inner shell to the outer shell.

(B) Radially inwards from the outer shell to the inner shell.

(C) Circular field lines between the shells and perpendicular to the radial direction.

(D) No magnetic field will be produced.

44. If a cell of constant emf produces the same amount of heat during the same time in two independent resistors R_1 and R_2 when they are separately connected across the terminals of the cell, one after the other. The internal resistance of the cell is

(A) $\frac{R_1 + R_2}{2}$ (B) $\frac{R_1 \sim R_2}{2}$

(C) $\frac{\sqrt{R_1^2 + R_2^2}}{2}$ (D) $\sqrt{R_1 R_2}$

45. In the circuit shown beside the charge on each capacitor is

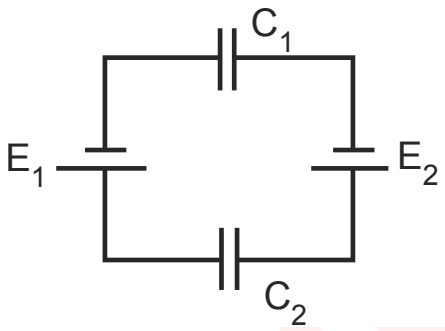

(A) $(C_1 + C_2)(E_1 - E_2)$ (B) $\frac{C_1 C_2}{C_1 + C_2}(E_1 + E_2)$

(C) $\frac{C_1 C_2}{C_1 + C_2}(E_1 - E_2)$ (D) $(C_1 - C_2)(E_1 + E_2)$

46. A stationary hydrogen atom emits photon corresponding to the first line (highest wave length) of Lyman series. If R is the Rydberg constant and M is the mass of the atom, the recoil velocity of the atom is

(A) $\frac{Rh}{4M}$ (B) $\frac{3Rh}{M}$

(C) $\frac{3Rh}{4M}$ (D) $\frac{Rh}{M}$

47. Heat is absorbed or evolved when current flows in a conductor having a temperature gradient. This phenomenon is known as

(A) Joule effect (B) Peltier effect (C) Seeback effect (D) Thomson effect

48. Identify the rank in order from the dimmest to the brightest when all the identical bulbs are connected in the circuit as shown below.

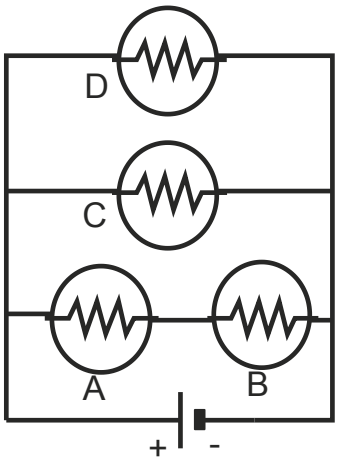

(A) A = B > C = D (B) A = B = C = D (C) A > C > B > D (D) A = B < C = D

49. The unit of magnetizing field is

(A) tesla (B) newton

(C) ampere (D) ampere turn/meter

50. A star undergoes a supernova explosion. Just after the explosion, the material left behind forms a uniform sphere of radius 8000 km with a rotation period of 15 hours. This remaining material eventually collapses into a neutron star of radius 4 km with a period of rotation

(A) 14 s (B) 3.8 h (C) 0.021 s (D) 0.0135 s

51. A number of identical absorbing plates are arranged in between a source of light and a photo cell. When there is no plate in between, the photo current is maximum. Under the circumstances let us focus on the two statements -

(1) The photo current decreases with the increase in number of absorbing plates.

(2) The stopping potential increases with the increase in number of absorbing plates.

(A) Statements (1) and (2) are both true and (1) is the cause of (2).

(B) Statements (1) and (2) are both true but (1) and (2) are independent.

(C) Statement (1) is true while (2) is not true and (1) and (2) are independent.

(D) Statement (1) is true while (2) is not true and (2) is the effect of (1).

52. In a nuclear reaction, two photons each of energy 0.51 MeV are produced by electron-positron annihilation. The wavelength associated with each photon is

(A) 2.44×10^{-12}m (B) 2.44×10^{-8}m (C) 1.46×10^{-12}m (D) 3.44×10^{-10}m

53. In the circuit shown if an ideal ammeter is connected between A and B then the direction of current and the current reading would be (assume I_s remains unchanged)

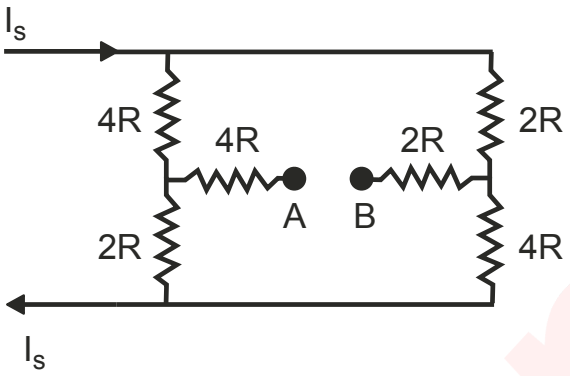

(A) B to A and $I_s/2$
(B) A to B and $I_s/4$
(C) B to A and $I_s/9$
(D) B to A and $I_s/3$

54. Avalanche breakdown in a p-n junction primarily depends on the phenomenon of

(A) doping (B) collision (C) recombination (D) ionization

55. A source emits photons of energy 5 eV which are incident on a metallic sphere of work function 3.0 eV. The radius of the sphere is $r = 8 \times 10^{-3}$ m. It is observed that after some time emission of photoelectrons from the metallic sphere is stopped. Charge on the sphere when the photoemission stops is.

(A) 1.77×10^{-16} C (B) 1.77×10^{-12} C (C) 1.11×10^{-12} C (D) 1.11×10^{-10} C

56. The dc component of current in the output of a half-wave rectifier with peak value I_o is

(A) zero
(B) $\frac{I_0}{\pi}$
(C) $\frac{I_0}{2\pi}$
(D) $\frac{2I_0}{\pi}$

57. In an experiment on photoelectric effect, the slope of straight line graph between the stopping potential and the frequency of incident radiation gives

(A) Electron charge (e)
(B) Planck constant (h)
(C) $\frac{h}{e}$
(D) Work function (W)

58. According to Bohr's theory the ionization energy of H atom is 13.6 eV. The energy needed to remove an electron from Helium ion (He^+) is

(A) 13.6 eV (B) 16.8 eV (C) 27.2 eV (D) 54.4 eV

59. The phenomenon inverse to photo electric effect is

(A) Compton effect
(B) Pair production
(C) Raman effect
(D) Production of X-rays in Coolidge tube

60. A stationary hydrogen atom emits a photon of wavelength 1025 Å. Its angular momentum changes by

(A) $\frac{h}{\pi}$
(B) $\frac{2h}{\pi}$
(C) $\frac{h}{2\pi}$
(D) $\frac{3h}{2\pi}$

PART A-2 · ONE OR MORE CORRECT OPTIONS

Q. 61 – 70 · 6 marks only if all correct options are marked · no negative marking

61. A block of mass m = 10 kg is hanging over a frictionless light fixed pulley by an inextensible light rope. Initially the block is held at rest. The other end of the rope is now pulled by a constant force F in the vertically downward direction. The linear momentum of the block is seen to increase by 2 kgm/s in 1 s (in the first second). Therefore,

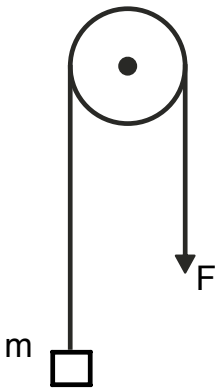

(A) the tension in the rope is F

(B) the tension in the rope is 3N

(C) the work done by the tension on the block, in first second, is = 19.8 J

(D) the work done against the force of gravity, in first second, is = 9.8 J

62. A ball of mass m_1 travels horizontally along the x-axis in the positive direction with an initial speed of v_0. It collides with another ball of mass m_2 that is originally at rest. After the collision, the ball of mass m_1 has velocity $\left(v_{1x}\hat{i} + v_{1y}\hat{j}\right)$ and the ball of mass m_2 has velocity $\left(v_{2x}\hat{i} + v_{2y}\hat{j}\right)$. Identify the correct relationship(s)

(A) $0 = m_1v_{1x} + m_2v_{2x}$

(B) $m_1v_0 = m_1v_{1y} + m_2v_{2y}$

(C) $0 = m_1v_{1y} + m_2v_{2y}$

(D) $m_1v_0 = m_1v_{1x} + m_2v_{2x}$

63. In a real gas

(A) the force of attraction between the molecules depends upon intermolecular distance.

(B) internal energy depends only upon temperature.

(C) internal energy is a function of both temperature and volume.

(D) internal energy is a function of both temperature and pressure.

64. A particle of mass m is thrown vertically up with velocity u. Air exerts an opposing force of a constant magnitude F. The particle returns back to the point of projection with velocity v after attaining maximum height h, then

(A) $h = \dfrac{u^2}{2\left(g + \frac{F}{m}\right)}$

(B) $h = \dfrac{v^2}{2\left(g - \frac{F}{m}\right)}$

(C) $v = u\sqrt{\dfrac{\left(g - \frac{F}{m}\right)}{\left(g + \frac{F}{m}\right)}}$

(D) $v = u\sqrt{\dfrac{\left(g + \frac{F}{m}\right)}{\left(g - \frac{F}{m}\right)}}$

65. A pin of small length 'a' is placed along the axis of a concave mirror of focal length f, at the distance u (> f) from its pole. The length of its image is 'b'. If the same object is placed perpendicular to its axis at the same distance u and the length of its image is now 'c', then

(A) $b = a\dfrac{f^2}{(u-f)^2}$

(B) $c = \sqrt{ab}$

(C) $c = b\dfrac{u-f}{f}$

(D) $bc = \dfrac{a^2f^3}{(u-f)^3}$

66. A thin rod of length 10 cm. is placed along the axis of a concave mirror of focal length 30 cm in such a way that one end of the image coincides with one end of the object. The length of the image may be

(A) 7.5 cm (B) 12 cm (C) 15 cm (D) 10 cm

67. The mass of an electron can be expressed as

where c is speed of light in vacuum

(A) 0.512 MeV

(B) 8.19×10^{-14} J/c^2

(C) 9.1×10^{-31} kg

(D) 0.00055 amu

68. Select the correct statement(s), out of the following, about diffraction at N parallel slits.

(A) There are (N – 1) minima between each pair of principal maxima.

(B) There are (N – 2) secondary maxima between each pair of principal maxima.

(C) Width of principal maximum is proportional to 1/N.

(D) The intensity at the principal maxima varies as N^2.

69. An electric dipole placed in a non-uniform electric field may experience

(A) no net force, no torque.

(B) a net force, but no torque.

(C) no net force, but a torque.

(D) a net force and a torque.

70. Two long parallel wires carry currents of equal magnitude (I) but in opposite directions. These wires are suspended from fixed rod PQ by four chords of equal length L as shown. The mass per unit length of each wire is λ , the value of angle θ substended by two chords OA and OB, assuming it to be small, is

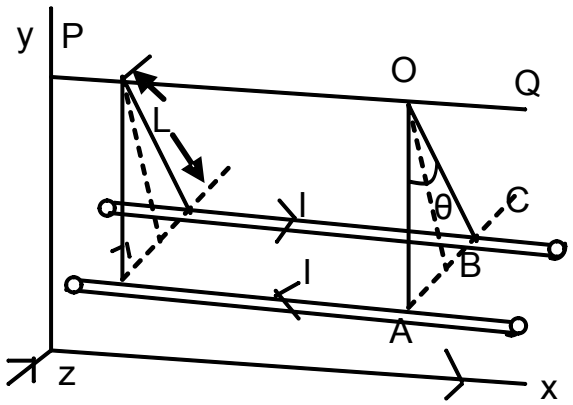

(A) $\theta = I\sqrt{\dfrac{\mu_0}{4\pi}\dfrac{\lambda}{gL}}$

(B) $\theta = I\sqrt{\dfrac{\mu_0}{\pi}\dfrac{1}{\lambda gL}}$

(C) $\theta = I\sqrt{\dfrac{\mu_0}{4\pi}\dfrac{g}{\lambda L}}$

(D) $\theta = I\sqrt{\dfrac{\mu_0}{\pi}\dfrac{\lambda g}{L}}$

ANSWER KEY

NSEP 2019 · PAPER CODE 61

70
QUESTIONS · 240 MARKS

IAPT final answer key for paper code 61. ★ marks an answer given as per Zigyan.

1	(D)	2	(B)	3	(C)	4	(D)	5	(D)
6	(D)	7	(D)	8	(B)	9	(D)	10	(C)
11	(C)★	12	(B)	13	—★	14	(B)	15	(D)
16	(A)	17	(A)	18	(D)	19	(C)	20	(A)
21	(D)	22	(A)	23	(B)	24	(C)	25	(C)
26	(C)	27	(A)	28	(B)	29	(A)	30	(D)
31	(A)	32	(D)	33	(C)	34	(C)	35	(C)
36	(D)	37	(A)	38	(A)	39	(B)	40	(C)
41	(B)	42	(A)	43	(D)	44	(D)	45	(C)
46	(C)	47	(D)	48	(D)	49	(D)	50	(D)
51	(C)	52	(A)	53	(C)	54	(B)	55	(B)
56	(B)	57	(C)	58	(D)	59	(D)	60	(A)
61	(A), (D)	62	(C), (D)	63	(A), (C), (D)	64	(A), (B), (C)	65	(A), (B), (C), (D)
66	(A), (C), (D)	67	(B), (C), (D)★	68	(A), (B), (C), (D)	69	(A), (B), (C), (D)★	70	(B)

★ Answers as per Zigyan

- **Q11** — As per Zigyan: (C); dropped by IAPT.
- **Q13** — As per Zigyan: no option is correct; IAPT key (D).
- **Q67** — As per Zigyan: (B), (C), (D); IAPT key (A), (B), (C), (D).
- **Q69** — As per Zigyan: (A), (B), (C), (D); IAPT key (B), (D).

zigyan

OLYMPIADS · 2026

Olympiad results



TOP ACHIEVEMENT · CHEMISTRY

Qualified the Chemistry Olympiad twice, and selected for the HBCSE camp.

Saksham Bishnoi reached the national stage of the Chemistry Olympiad in two consecutive years and was selected for the Orientation-cum-Selection Camp at HBCSE, Mumbai. 4 Years Classroom - the same student who took AIR 168 in JEE Advanced 2026.

Qualified twice | HBCSE selection camp | Only student from Faridabad

Above MAS means above the **Minimum Admissible Score**: clearing it puts a student in the national band for their subject. It is a real threshold, not a participation marker.

CHEMISTRY · ABOVE MAS



Sulokya Bibhuty
Class XII
3 Years Classroom
Above MAS



Anay Gupta
Class XI
3 Years Classroom
Above MAS



Akshat Khator
Class XI
3 Years Classroom
Above MAS



Harshit Goyal
Class XII
4 Years Classroom
Above MAS



Hardik Sharma
Class XI
3 Years Classroom
Above MAS



Aarush Kumar
Class XII
1 Year Classroom
Above MAS

PHYSICS · ASTRONOMY · MATHEMATICS

PHYSICS



Sulokya Bibhuty
Class XII
3 Years Classroom
Above MAS

PHYSICS



Saksham Bishnoi
Class XII
4 Years Classroom
Above MAS

ASTRONOMY



Sulokya Bibhuty
Class XI
3 Years Classroom
Above MAS

MATHEMATICS · IOQM



Priyanshi
Class XI
4 Years Classroom
IOQM Qualifier

OLYMPIADS WE PREPARE STUDENTS FOR

NSEP	NSEC	NSEB	NSEA	IOQM	NSEJS
Physics	Chemistry	Biology	Astronomy	Mathematics	Class X and below

The olympiad pathway starts in Class 8.

NSEJS is open to Class 10 and below - the habit of staying with one hard problem is the one JEE Advanced rewards.

Zigyan Eduvision Pvt. Ltd. · SCO No. 107, Sector 16, Faridabad 121002
0129-4048800 · +91 92115 38800 · info@zigyan.com

zigyan

RESULTS · 2021 – 2026

Our toppers, year by year

40
JEE Advanced selections in 6 years

AIR 168
best rank — Saksham Bishnoi, 2026

16 of 35
students selected, JEE Advanced 2026

14 of 35
above 98 percentile, JEE Main 2026

JEE ADVANCED SELECTIONS PER YEAR

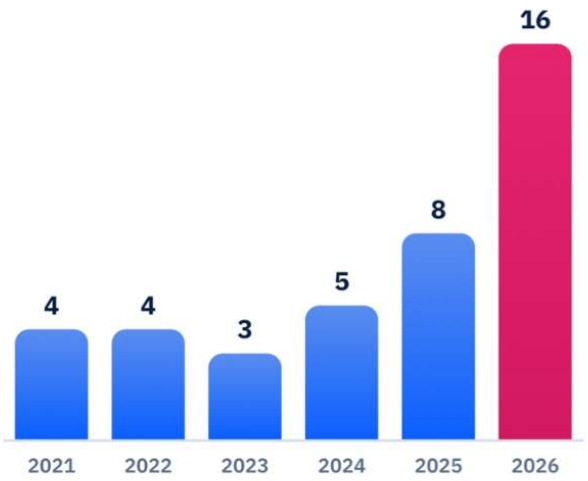

BEST RANK EACH YEAR

YEAR	JEE ADVANCED	JEE MAIN
2026	**Saksham Bishnoi** AIR 168 · 4 Years Classroom	**Saksham Bishnoi** AIR 811 · 99.95 %ile
2025	**Chakshu** AIR 4,233 · 2 Years Classroom	**Chakshu** AIR 8,538 · 99.44 %ile
2024	**Harshit** AIR 777 · 2 Years Classroom	**Harshit** AIR 1,473 · 99.91 %ile
2023	**Aditya Jain** AIR 2,373 · 2 Years Classroom	**Aditya Jain** AIR 2,503 · 99.79 %ile
2022	**Rachit Sharma** AIR 698 · 1 Year Classroom	**Rachit Sharma** AIR 1,016 · 99.90 %ile
2021	**Sparsh Mittal** AIR 2,237 · 1 Year Classroom	**Sparsh Mittal** AIR 1,562

JEE ADVANCED 2026 — THIRTEEN NAMED SELECTIONS



Saksham Bishnoi
AIR 168
4 Years Classroom



Sulokya Bibhuty
AIR 1,315
3 Years Classroom



Aarush
AIR 2,699
1 Year Classroom



Manishka
AIR 2,869
4 Years Classroom



Oojit Kumar
AIR 5,765
4 Years Classroom



Harshit Goyal
AIR 6,407
4 Years Classroom



Pranab Sharma
AIR 6,750
3 Years Classroom



Aditya Dhar
AIR 15,183
3 Years Classroom



Arpit Anshuman
AIR 19,308
4 Years Classroom



Lokesh
AIR 22,857
3 Years Classroom



Arjun
AIR 24,674
3 Years Classroom



Sanyam Gulyani
AIR 25,123
1 Year Classroom



Saket
AIR 27,628
3 Years Classroom

Sixteen students of the 2026 batch were selected in JEE Advanced; the thirteen above are named with their All India Rank.

JEE MAIN 2026 — TOP SIX, WITH PERCENTILE



Saksham Bishnoi
AIR 811
99.95 %ile
4 Years Classroom



Sulokya Bibhuty
AIR 1,095
99.94 %ile
3 Years Classroom



Harshit Goyal
AIR 2,662
99.83 %ile
4 Years Classroom



Manishka
AIR 4,817
99.70 %ile
4 Years Classroom



Oojit Kumar
AIR 5,040
99.69 %ile
4 Years Classroom



Aarush
AIR 5,276
99.67 %ile
1 Year Classroom

14 of the 35 students in the 2026 batch scored above the 98th percentile in JEE Main.

Zigyan Eduvision Pvt. Ltd. · SCO No. 107, Sector 16, Faridabad 121002
0129-4048800 · +91 92115 38800 · info@zigyan.com