zigyan

PREVIOUS YEAR PAPER · 2019

OLYMPIAD · STAGE I

NSEP

National Standard Examination in Physics

2019

Question paper, answer key and Zigyan solutions

70	240	120 min	61
Questions	Maximum marks	Time	Paper code

Question paper and official answer key: Indian Association of Physics Teachers (IAPT), NSEP 2019, paper code 61.
Solutions and notes: Zigyan. This booklet is not an IAPT publication.

Prepare for the Olympiads with Zigyan

www.zigyan.com

zigyan

SCO No. 107, Sector 16, Faridabad, Haryana 121002
0129-4048800 · +91 92115 38800 · info@zigyan.com

zigyan

JEE 2026 RESULTS

OUR TOPPERS

When talent meets the right guidance.

Saksham Bishnoi and Sulokya Bibhuty - our JEE 2026 toppers from Zigyan, Sector 16 - with the programme they took and the rank they earned.



Rahul Kaushik Sir
Founder & Director, Zigyan Eduvision
23 years of teaching



Saksham Bishnoi

4 YEARS CLASSROOM

JEE ADVANCED 2026	JEE MAIN 2026
AIR 168	AIR 811
	99.95 percentile



Sulokya Bibhuty

3 YEARS CLASSROOM

JEE ADVANCED 2026	JEE MAIN 2026
AIR 1,315	AIR 1,095
	99.94 percentile

OLYMPIAD RESULTS

Above the Minimum Admissible Score - the national band for the subject

CHEMISTRY

- Sulokya Bibhuty — 3 Years Classroom
- Anay Gupta — 3 Years Classroom
- Akshat Khator — 3 Years Classroom
- Harshit Goyal — 4 Years Classroom
- Hardik Sharma — 3 Years Classroom
- Aarush Kumar — 1 Year Classroom

PHYSICS

- Sulokya Bibhuty — 3 Years Classroom
- Saksham Bishnoi — 4 Years Classroom

ASTRONOMY

- Sulokya Bibhuty — 3 Years Classroom

MATHEMATICS (IOQM)

- Priyanshi — 4 Years Classroom

Saksham Bishnoi qualified the Chemistry Olympiad twice and was selected for the Orientation-cum-Selection Camp at HBCSE, Mumbai.

16 selections	16 of 35	AIR 168
in JEE Advanced 2026	students of the batch selected	best JEE Advanced rank

Start where they started.

Register for ZEST - ₹200 · www.zigyan.com/scholarship/zest

+91 92115 38800
info@zigyan.com

Given in the question paper

Physical constants you may need….

Magnitude of charge on electron $e = 1.60\times10^{-19}$ C	Boiling point of hydrogen = $20.3K$
Mass of electron $m_e = 9.10\times10^{-31}$kg	Boiling point of helium = $4.2K$
Mass of proton $m_p = 1.67\times10^{-27}$kg	Boiling point of nitrogen = $77.4K$
Acceleration due to gravity $g = 9.8$ ms^{-2}	Boiling point of oxygen = $90.19K$
Universal gravitational constant $G = 6.67\times10^{-11}$ Nm^2/Kg^2	Permittivity of free space $\varepsilon_0 = 8.85\times10^{-12}$ C^2 / Nm^2
Universal gas constant $R = 8.31$ J / mol K	Permeability of free space $\mu_0 = 4\pi\times10^{-7}$ H/m
Boltzmann constant $k = 1.38\times10^{-23}$ J / K	Planck's constant $h = 6.62\times10^{-34}$ Js
Stefan's constant $\sigma = 5.67\times10^{-8}$ W / m^{2}K^4	Faraday constant = 96,500C / mol
Rydberg constant $R = 1.097\times10^{7}$ m^{-1}	

PART A-1 · ONE CORRECT OPTION

Q. 1 – 60 · +3 for a correct answer, –1 for a wrong one

1. An observer stands on the platform at the front edge of the first bogie of a stationary train. The train starts moving with uniform acceleration and the first bogie takes 5 seconds to cross the observer. If all the bogies of the train are of equal length and the gap between them is negligible, the time taken by the tenth bogie to cross the observer is

(A) 1.07s (B) 0.98s (C) 0.91s (D) 0.81s

Solution · Q1 **Answer: (D)**

Let each bogie have length L and the acceleration be a. For the first bogie,

$$L = \frac{1}{2}a\times5^2$$

For n bogies,

$$nL = \frac{1}{2}at_n^2$$

$$\Rightarrow t_n = 5\sqrt{n}$$

Time for the tenth bogie to cross:

$$\Delta t = t_{10} - t_9$$

$$\Rightarrow \Delta t = 5\left(\sqrt{10} - \sqrt{9}\right)$$

$$\Rightarrow \Delta t = 5(3.162 - 3)$$

$$\therefore \Delta t = 0.81 \text{ s}$$

IAPT answer: (D) | **Zigyan answer:** (D)

2. The resistive force on an aeroplane flying in a horizontal plane is given by $F_f = kv^2$, where k is constant and v is the speed of the aeroplane. When the power output from the engine is P_0, the plane flies at a speed v_0. If the power output of the engine is doubled the aeroplane will fly at a speed of

(A) $1.12\ v_0$ (B) $1.26\ v_0$ (C) $1.41\ v_0$ (D) $2.82\ v_0$

Solution · Q2 **Answer: (B)**

At steady speed, the thrust balances the resistive force.

$$F = kv^2$$

$$P = Fv$$

$$\Rightarrow P = kv^3$$

$$\therefore \left(\frac{v}{v_0}\right)^3 = 2$$

$$\Rightarrow v = 2^{1/3} v_0$$

$$\therefore v = 1.26\ v_0$$

IAPT answer: (B) | **Zigyan answer:** (B)

3. A 3.0 cm thick layer of oil (density $\rho_{oil} = 800\ kg/m^3$) floats on water (density $\rho_w = 1000\ kg/m^3$) in a transparent glass beaker. A solid cylinder is observed floating vertically with $\frac{1}{3}$ of it in water and $\frac{1}{3}$ in the oil. Oil is gently poured into the beaker until the cylinder floats in oil only. The fraction of the solid cylinder in oil now is

(A) $\frac{3}{5}$ (B) $\frac{2}{3}$

(C) $\frac{3}{4}$ (D) $\frac{8}{9}$

Solution · Q3 **Answer: (C)**

Initially, neglecting the upthrust of air,

$$\rho_c V g = \rho_w \frac{V}{3} g + \rho_{oil} \frac{V}{3} g$$

$$\Rightarrow \rho_c = \frac{1000 + 800}{3}$$

$$\Rightarrow \rho_c = 600\ kg\ m^{-3}$$

When it floats in oil alone, with a fraction f immersed,

$$\rho_c V g = \rho_{oil} (fV) g$$

$$\Rightarrow f = \frac{600}{800}$$

$$\therefore f = \frac{3}{4}$$

IAPT answer: (C) | **Zigyan answer:** (C)

4. A wedge of mass M rests on a horizontal frictionless surface. A block of mass m starts sliding down the rough inclined surface of the wedge to its bottom. During the course of motion, the centre of mass of the block and the wedge system

(A) does not move at all
(B) moves horizontally with constant speed
(C) moves horizontally with increasing speed
(D) moves vertically with increasing speed

Solution · Q4 **Answer: (D)**

For the block and wedge together, the forces between them are internal. The floor is frictionless, so every external force is vertical.

Hence the centre of mass, initially at rest, cannot move horizontally.

The wedge has no vertical motion. If the block has a downward acceleration component a_y, then

$$a_{cm} = \frac{ma_y}{M+m}$$

With a constant coefficient of friction, the centre of mass therefore moves vertically downward with increasing speed.

IAPT answer: (D) | **Zigyan answer:** (D)

5. A uniform circular disc rotating at a fixed angular velocity ω about an axis normal to its plane and passing through its centre has kinetic energy E. If the same disc rotates with an angular velocity 2ω about a parallel axis passing through the edge, its kinetic energy will be

(A) 2 E (B) 4 E (C) 10E (D) 12 E

Solution · Q5 **Answer: (D)**

About the central axis,

$$I_c = \frac{1}{2}MR^2$$

$$E = \frac{1}{2}I_c\omega^2$$

About the edge, by the parallel axis theorem,

$$I_e = I_c + MR^2$$

$$\Rightarrow I_e = 3I_c$$

$$E' = \frac{1}{2}(3I_c)(2\omega)^2$$

$$\therefore E' = 12E$$

IAPT answer: (D) | **Zigyan answer:** (D)

6. In the following figures the velocity-time graphs for three particles 1, 2 and 3 are shown.

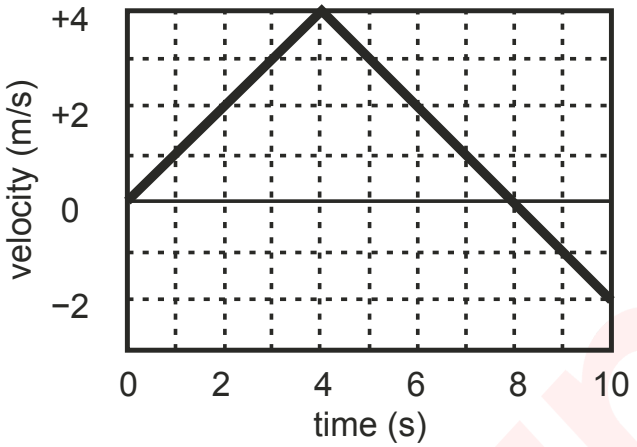

Particle 1

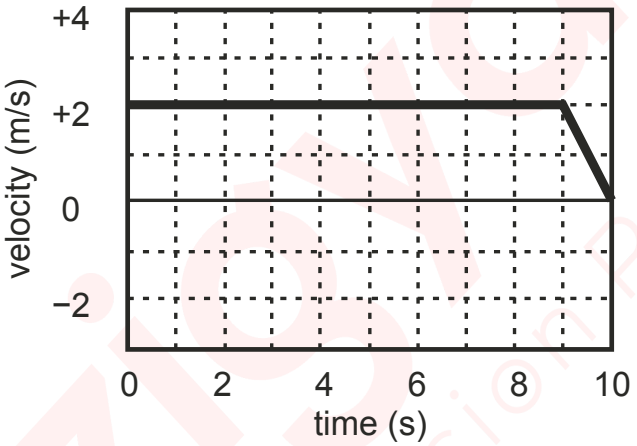

Particle 2

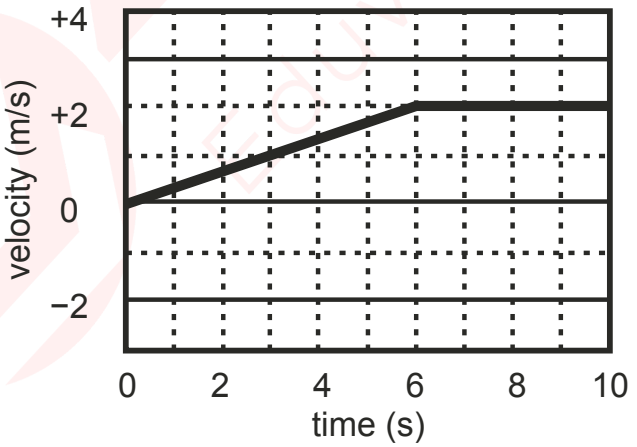

Particle 3

The magnitude of average acceleration of the three particles, over 10 s, bear the relationship

(A) $a_1 > a_2 > a_3$ (B) $a_2 > a_1 > a_3$ (C) $a_3 > a_2 > a_1$ (D) $a_1 = a_2 = a_3$

Solution · Q6 **Answer: (D)**

Average acceleration depends only on the initial and final velocities.

$$a_1 = \frac{|-2-0|}{10}$$

$$\Rightarrow a_1 = 0.2 \text{ m s}^{-2}$$

$$a_2 = \frac{|0-2|}{10}$$

$$\Rightarrow a_2 = 0.2 \text{ m s}^{-2}$$

$$a_3 = \frac{|2-0|}{10}$$

$$\Rightarrow a_3 = 0.2 \text{ m s}^{-2}$$

$$\therefore a_1 = a_2 = a_3$$

IAPT answer: (D) | **Zigyan answer:** (D)

7. The potential energy (U) of a particle moving in a potential field varies with its displacement (x) as shown below.

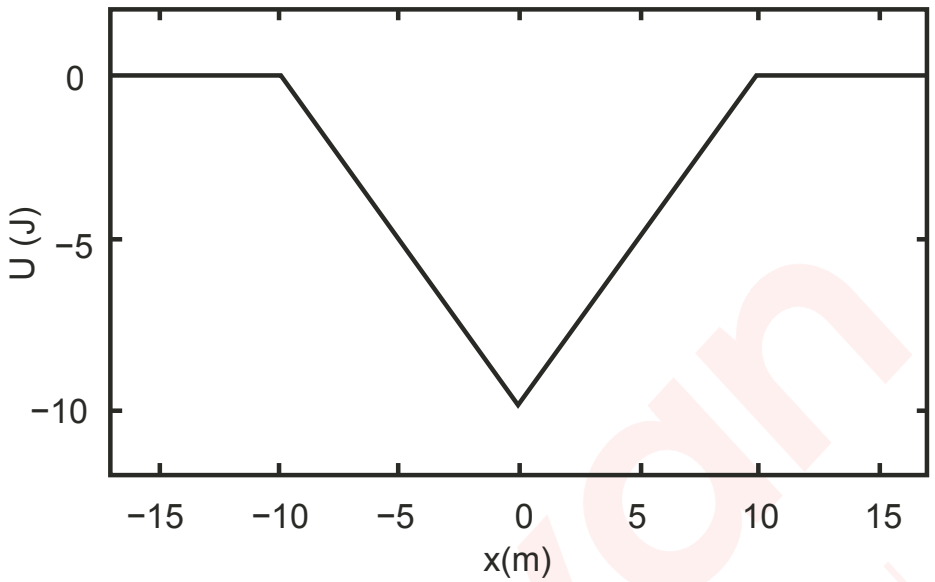

The variation of force F(x) acting on the particle as a function of x can be represented by

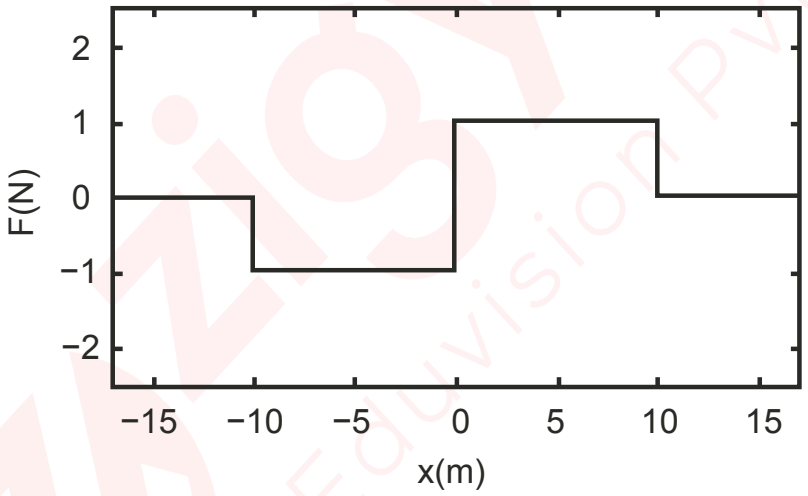

(Fig i)

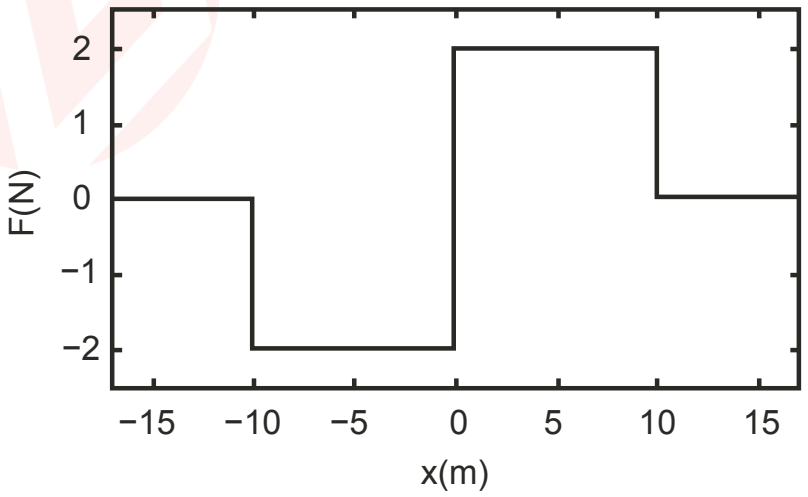

(Fig ii)

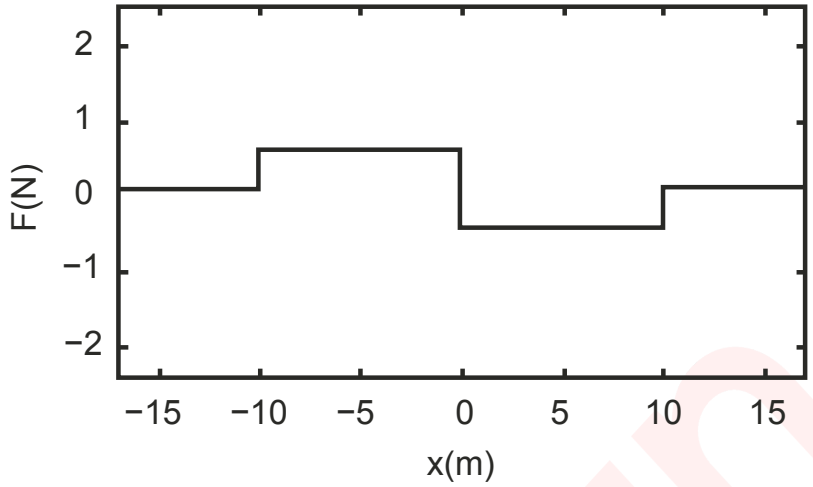

(Fig iii)

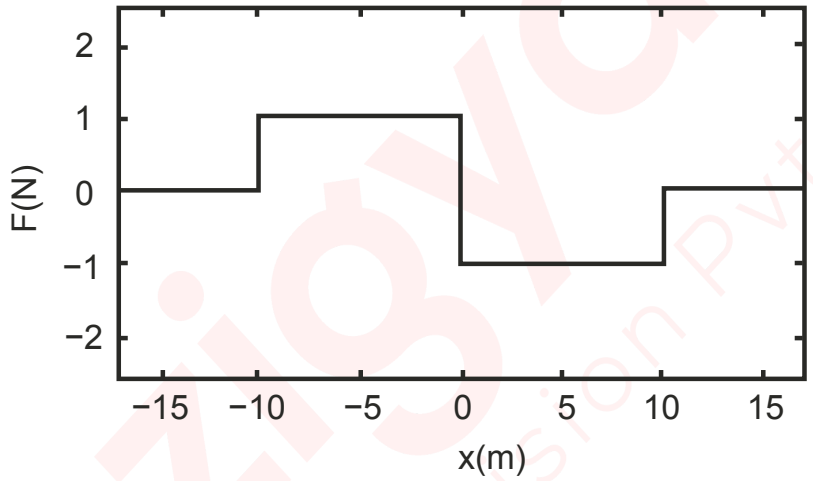

(Fig iv)

(A) Fig (i) (B) Fig (ii) (C) Fig (iii) (D) Fig (iv)

Solution · Q7 **Answer: (D)**

$$F = -\frac{dU}{dx}$$

Beyond the two ends of the well U is constant, so no force acts there. On the left arm,

$$\frac{dU}{dx} = \frac{-10-0}{0-(-10)}$$

$$\Rightarrow F = +1\ N$$

On the right arm,

$$\frac{dU}{dx} = +1\ J\ m^{-1}$$

$$\Rightarrow F = -1\ N$$

Only Fig (iv) shows this variation.

IAPT answer: (D) | **Zigyan answer:** (D)

8. A pendulum is made by using a thread of length 300 cm and a small spherical bob of mass 100 g. It is suspended from a point S. The bob is pulled from its position of rest at O to the point A so that the linear amplitude is 25 cm. The angular amplitude in radian and the potential energy of the bob in joule at A are respectively

(A) 0.10 and 0.10 (B) 0.083 and 0.01 (C) 0.251 and 2.94 (D) 0.083 and 0.24

Solution · Q8 **Answer: (B)**

The linear amplitude is the arc OA.

$$\theta_0 = \frac{25}{300}$$

$$\Rightarrow \theta_0 = 0.083 \text{ rad}$$

Rise of the bob, for a small angle:

$$h = \frac{L\theta_0^2}{2}$$

$$\Rightarrow h = \frac{3.00}{2 \times 144}$$

$$\Rightarrow h = 0.0104 \text{ m}$$

$$U = mgh$$

$$\Rightarrow U = 0.100 \times 9.8 \times 0.0104$$

$$\therefore U \approx 0.01 \text{ J}$$

IAPT answer: (B) | **Zigyan answer:** (B)

9. Consider the following physical expressions

(I) ρv^2 (ρ: density, v: velocity)

(II) $\frac{Y\Delta L}{L}$ (Y: Young's modulus, L: length)

(III) $\frac{\sigma^2}{\varepsilon_0}$ (σ: surface density of charge)

(IV) $h\rho rg$ (h: rise of a liquid in a capillary tube of radius r)

The expressions having same dimensional formula are

(A) I and II only (B) II and III only

(C) II, III and IV only (D) I, II and III only

Solution · Q9 **Answer: (D)**

Compare each with the dimensions of pressure.

$$[P] = [ML^{-1}T^{-2}]$$

For (I):

$$[\rho v^2] = [ML^{-3}][L^2T^{-2}]$$

$$\Rightarrow [\rho v^2] = [ML^{-1}T^{-2}]$$

In (II), $\Delta L/L$ is a pure number, so it has the dimensions of Young's modulus, that is, of stress.

In (III), σ/ε_0 is an electric field; multiplied by charge per unit area, it gives force per unit area.

For (IV):

$$[h\rho rg] = [ML^{-1}T^{-2}][L]$$

$$\Rightarrow [h\rho rg] = [MT^{-2}]$$

So only I, II and III match.

IAPT answer: (D) | **Zigyan answer:** (D)

10. Two simple pendulums of lengths 1.44 m and 1.0 m start swinging together in the same phase. The two will be in phase again after a time of

(A) 6 second (B) 9 second (C) 12 second (D) 25 second

Solution · Q10 **Answer: (C)**

$$\frac{T_1}{T_2} = \sqrt{\frac{1.44}{1.00}}$$

$$\Rightarrow \frac{T_1}{T_2} = \frac{6}{5}$$

$$\Rightarrow 5T_1 = 6T_2$$

So they are first in phase when the shorter pendulum completes 6 oscillations and the longer one 5.

$$T_2 = 2\pi\sqrt{\frac{1.00}{9.8}}$$

$$\Rightarrow T_2 = 2.007 \text{ s}$$

$$t = 6T_2$$

$$\therefore t \approx 12 \text{ s}$$

IAPT answer: (C) | **Zigyan answer:** (C)

11. A home aquarium partly filled with water slides down an inclined plane of inclination angle θ with respect to the horizontal. The surface of water in the aquarium

(A) remains horizontal.

(B) remains parallel to the plane of the incline.

(C) forms an angle α with the horizon where $0 < \alpha < \theta$

(D) forms an angle α with horizon, where $\theta < \alpha < 90$

Solution · Q11 **As per Zigyan: (C)**

Take the incline as rough, with kinetic friction of coefficient μ and the tank still gaining speed.

$$a = g(\sin\theta - \mu\cos\theta)$$

In the tank's frame, the parts of effective gravity along and normal to the plane are

$$g_{\parallel} = g\sin\theta - a$$

$$\Rightarrow g_{\parallel} = \mu g\cos\theta$$

$$g_{\perp} = g\cos\theta$$

$$\tan\varphi = \frac{g_{\parallel}}{g_{\perp}}$$

$$\Rightarrow \tan\phi = \mu$$

The water surface is normal to effective gravity, so it makes this angle with the plane. Its angle with the horizontal is

$$\alpha = \theta - \phi$$

While the tank speeds up,

$$0 < \mu < \tan\theta$$

$$\Rightarrow 0 < \alpha < \theta$$

Check: In the ground frame, the surface slope is the horizontal acceleration divided by g less the downward acceleration.

This again gives θ minus the angle of friction.

IAPT answer: question dropped by IAPT | **Zigyan answer:** (C)

12. A sound source of constant frequency travels with a constant velocity past an observer. When it crosses the observer the sound frequency sensed by the observer changes from 449 Hz to 422 Hz. If the velocity of sound is 340 m/s, the velocity of the source of sound is

(A) 8.5 m/s (B) 10.5 m/s (C) 12.5 m/s (D) 14.5 m/s

Solution · Q12 **Answer: (B)**

Taking the observer very close to the line of motion, while the source approaches,

$$449 = \frac{fv}{v-u}$$

After it passes,

$$422 = \frac{fv}{v+u}$$

$$\Rightarrow \frac{449}{422} = \frac{v+u}{v-u}$$

$$\Rightarrow \frac{u}{v} = \frac{449-422}{449+422}$$

$$\Rightarrow u = \frac{340 \times 27}{871}$$

$$\therefore u = 10.5 \text{ m s}^{-1}$$

IAPT answer: (B) | **Zigyan answer:** (B)

13. Light of wavelength 640 nm falls on a plane diffraction grating with 12000 lines per inch. In the diffraction pattern on a screen kept at a distance of 12 cm from the grating, the distance of the second order maximum from the central maximum is

(A) 1.81 cm (B) 2.41 cm (C) 3.62 cm (D) 7.25 cm

Solution · Q13 **As per Zigyan: no option is correct**

Grating element:

$$d = \frac{2.54 \times 10^{-2}}{12000} \text{ m}$$

$$\Rightarrow d \approx 2.117 \times 10^{-6} \text{ m}$$

For the second order,

$$\sin\theta = \frac{2\lambda}{d}$$

$$\Rightarrow \sin\theta \approx 0.6047$$

$$\Rightarrow \theta \approx 37.2^\circ$$

$$\tan\theta = \frac{\sin\theta}{\sqrt{1-\sin^2\theta}}$$

$$\Rightarrow \tan\theta \approx 0.7593$$

On the flat screen,

$$y = D\tan\theta$$

$$\Rightarrow y = 12 \times 0.7593$$

$$\Rightarrow y \approx 9.11 \text{ cm}$$

This is not among the options.

Why Zigyan differs from IAPT: the keyed 7.25 cm needs sin θ in place of tan θ, but at 37.2° the tangent is about 26% larger.

Reference: OpenStax University Physics Volume 3, section 4.4 'Diffraction Gratings': maxima occur where d sin θ is a whole number of wavelengths.

Reference: Its worked example finds distances on a flat screen with tan θ, not sin θ.

IAPT answer: (D) | **Zigyan answer:** none of the options is correct

14. If the force acting on a body is inversely proportional to its speed, the kinetic energy of the body varies with time t as

(A) t^0 (B) t^1 (C) t^2 (D) t^{-1}

Solution · Q14 **Answer: (B)**

For a positive constant c, with the force along the motion,

$$F = \frac{c}{v}$$

$$P = Fv$$

$$\Rightarrow P = c$$

By the work–energy theorem,

$$\frac{dE}{dt} = c$$

$$\Rightarrow E = E_0 + ct$$

For a body starting from rest,

$$E = ct$$

$$\therefore E \propto t^1$$

IAPT answer: (B) | **Zigyan answer:** (B)

15. As shown in the figure, a block of mass m is hung from the ceiling by the system of springs consisting of two layers. The force constant of each of the springs is k. The frequency of the vertical oscillations of the block is

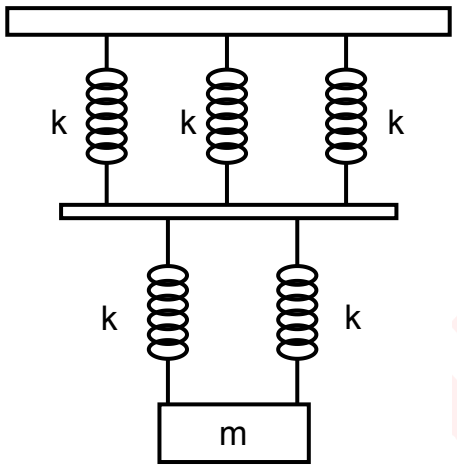

(A) $\frac{1}{2\pi}\sqrt{\frac{k}{5m}}$ (B) $\frac{1}{2\pi}\sqrt{\frac{4k}{5m}}$

(C) $\frac{1}{2\pi}\sqrt{\frac{5k}{6m}}$ (D) $\frac{1}{2\pi}\sqrt{\frac{6k}{5m}}$

Solution · Q15 **Answer: (D)**

The bar stays level, so the three upper springs are in parallel, as are the two lower ones.

$$k_1 = 3k,\ k_2 = 2k$$

The massless bar puts the two layers in series.

$$\frac{1}{k_{eq}} = \frac{1}{3k} + \frac{1}{2k}$$

$$\Rightarrow k_{eq} = \frac{6k}{5}$$

$$f = \frac{1}{2\pi}\sqrt{\frac{k_{eq}}{m}}$$

$$\therefore f = \frac{1}{2\pi}\sqrt{\frac{6k}{5m}}$$

IAPT answer: (D) | **Zigyan answer:** (D)

16. Two simple harmonic motions are given by $x_1 = a\sin\omega t + a\cos\omega t$ and $x_2 = a\sin\omega t + \frac{a}{\sqrt{3}}\cos\omega t$ The ratio of the amplitudes of the first to the second and the phase difference between them respectively are

(A) $\sqrt{\frac{3}{2}}$ and $\frac{\pi}{12}$ (B) $\frac{\sqrt{3}}{2}$ and $\frac{\pi}{12}$

(C) $\frac{2}{\sqrt{3}}$ and $\frac{\pi}{12}$ (D) $\sqrt{\frac{3}{2}}$ and $\frac{\pi}{6}$

Solution · Q16 **Answer: (A)**

Amplitude and phase of p sin ωt + q cos ωt:

$$R = \sqrt{p^2 + q^2}$$

$$\tan\varphi = \frac{q}{p}$$

For x_1:

$$A_1 = \sqrt{2}\ a$$

$$\varphi_1 = \frac{\pi}{4}$$

For x_2:

$$A_2 = \frac{2a}{\sqrt{3}}$$

$$\varphi_2 = \frac{\pi}{6}$$

$$\therefore \frac{A_1}{A_2} = \sqrt{\frac{3}{2}}$$

$$\therefore \varphi_1 - \varphi_2 = \frac{\pi}{12}$$

IAPT answer: (A) | **Zigyan answer:** (A)

17. A particle is projected from the ground with a velocity $\vec{v} = \left(3\hat{i} + 10\hat{j}\right)$ ms^{-1}. The maximum height attained and the range of the particle are respectively given by (use g = 10 m/s^2)

(A) 5m and 6 m (B) 3m and 10 m (C) 6m and 5 m (D) 3m and 5 m

Solution · Q17 **Answer: (A)**

$$u_x = 3\ \text{m s}^{-1},\ u_y = 10\ \text{m s}^{-1}$$

$$H = \frac{u_y^2}{2g}$$

$$\Rightarrow H = \frac{10^2}{2\times 10}$$

$$\Rightarrow H = 5\ \text{m}$$

$$T = \frac{2u_y}{g}$$

$$\Rightarrow T = 2\ \text{s}$$

$$R = u_x T$$

$$\Rightarrow R = 6\ \text{m}$$

IAPT answer: (A) | **Zigyan answer:** (A)

18. A 20 cm long capillary tube stands vertically with lower end just in water. Water rises up to 5 cm. If the entire system is now kept on a freely falling platform, the length of the water column in the capillary tube will be

(A) 5 cm (B) 10 cm (C) Zero (D) 20 cm

Solution · Q18 **Answer: (D)**

Capillary rise:

$$h = \frac{2S\cos\theta}{r\rho g}$$

On the freely falling platform,

$$g_{eff} = 0$$

With no weight to balance, water climbs to the top of the 20 cm tube. There the meniscus flattens, so it does not spill.

So the column is 20 cm long.

IAPT answer: (D) | **Zigyan answer:** (D)

19. Position-time graph of a particle moving in a potential field is shown beside. If the mass of the particle is 1 kg its total energy is approximately

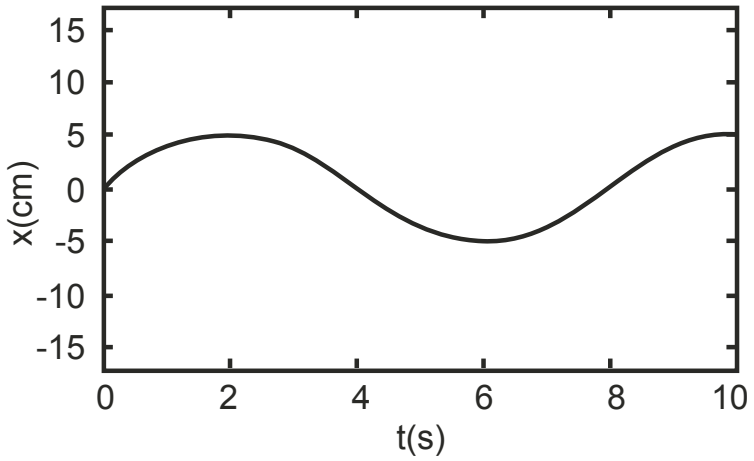

(A) 15.45×10^{-4} J (B) 30.78×10^{-4} J (C) 7.71×10^{-4} J (D) 3.85×10^{-4} J

Solution · Q19 **Answer: (C)**

The motion is simple harmonic about the mean position, where potential energy is taken as zero. From the graph,

$$A = 0.05 \text{ m}, T = 8 \text{ s}$$

$$\omega = \frac{2\pi}{T}$$

$$\Rightarrow \omega = \frac{\pi}{4} \text{ rad s}^{-1}$$

$$v_{max} = A\omega$$

$$\Rightarrow v_{max} \approx 0.03927 \text{ m s}^{-1}$$

$$E = \frac{1}{2}mv_{max}^2$$

$$\Rightarrow E = \frac{1}{2} \times 1 \times (0.03927)^2$$

$$\therefore E \approx 7.71 \times 10^{-4} \text{ J}$$

IAPT answer: (C) | **Zigyan answer:** (C)

20. Plots of intensity (I) of radiation emitted by a black body versus wavelength (λ) at three different temperatures T_1, T_2 and T_3 respectively are shown in figure. Choose the correct statement.

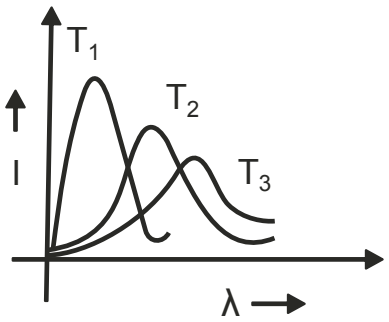

(A) $T_1 > T_2 > T_3$ necessarily

(B) $T_3 > T_2 > T_1$ necessarily

(C) $T_2 = (T_1 + T_3)/2$ necessarily

(D) $T_2^2 = T_1 T_3$ necessarily

Solution · Q20 **Answer: (A)**

The order of the peak wavelengths in the figure is

$$\lambda_{m1} < \lambda_{m2} < \lambda_{m3}$$

By Wien's law,

$$\lambda_m T = b$$

$$\therefore T_1 > T_2 > T_3$$

The sketch is only rough, as true black-body curves do not cross; only the order of the peaks is used.

IAPT answer: (A) | **Zigyan answer:** (A)

21. Consider a composite slab consisting of two different materials having equal thickness and equal area of cross-section. The thermal conductivities are K and 2K respectively. The equivalent thermal conductivity of the composite slab is

(A) $\frac{2K}{3}$

(B) $\sqrt{2}\ K$

(C) 3K

(D) $\frac{4K}{3}$

Solution · Q21 **Answer: (D)**

The layers are taken in series, as only that arrangement matches an option. Thermal resistance of a slab:

$$R = \frac{L}{KA}$$

In series the resistances add, over a total thickness of two layers.

$$\frac{2L}{K_{eq}A} = \frac{L}{KA} + \frac{L}{2KA}$$

$$\Rightarrow \frac{2L}{K_{eq}A} = \frac{3L}{2KA}$$

$$\therefore K_{eq} = \frac{4K}{3}$$

IAPT answer: (D) | **Zigyan answer:** (D)

22. A large horizontal uniform disc can rotate freely about a rigid vertical axis passing through its centre O. A man stands at rest at the edge of the disc at a point A. The mass of the disc is 22 times the mass of the man. The man starts moving along the edge of the disc. When he reaches A, after completing one rotation relative to the disc, the disc has turned through

(A) 30° (B) 90° (C) 60° (D) 45°

Solution · Q22 **Answer: (A)**

No external torque acts about the axis, so the total angular momentum stays zero. Moment of inertia of the disc, with m the man's mass:

$$I = \frac{1}{2}(22m)R^2$$

$$\Rightarrow I = 11mR^2$$

If the man turns through α and the disc through β relative to the ground,

$$mR^2\alpha = 11mR^2\beta$$

$$\Rightarrow \alpha = 11\beta$$

For one rotation relative to the disc,

$$\alpha + \beta = 2\pi$$

$$\Rightarrow 12\beta = 2\pi$$

$$\therefore \beta = 30°$$

IAPT answer: (A) | **Zigyan answer:** (A)

23. Two factories are sounding their sirens at 400 Hz each. A man walks from one factory towards the other at a speed of 2 m/s. The velocity of sound is 320 m/s. The number of beats heard by the person in one second will be

(A) 6 (B) 5 (C) 4 (D) 2.5

Solution · Q23 **Answer: (B)**

Take still air, with the man between the factories. For the siren behind him,

$$f_1 = 400 \times \frac{320 - 2}{320}$$

$$\Rightarrow f_1 = 397.5 \text{ Hz}$$

For the siren ahead,

$$f_2 = 400 \times \frac{320 + 2}{320}$$

$$\Rightarrow f_2 = 402.5 \text{ Hz}$$

Beats per second:

$$f_2 - f_1 = 5$$

IAPT answer: (B) | **Zigyan answer:** (B)

24. The temperature of an isolated black body falls from T_1 to T_2 in time t. Then, t = C x where x is

(A) $\left(\frac{1}{T_2}-\frac{1}{T_1}\right)$ (B) $\left(\frac{1}{T_2^2}-\frac{1}{T_1^2}\right)$

(C) $\left(\frac{1}{T_2^3}-\frac{1}{T_1^3}\right)$ (D) $\left(\frac{1}{T_2^4}-\frac{1}{T_1^4}\right)$

Solution · Q24 **Answer: (C)**

The isolated body only loses energy. With constant specific heat s,

$$-ms\,dT = \sigma A T^4\,dt$$

$$\Rightarrow dt = -\frac{ms}{\sigma A}\frac{dT}{T^4}$$

$$\Rightarrow t = \frac{ms}{3\sigma A}\left(\frac{1}{T_2^3}-\frac{1}{T_1^3}\right)$$

$$\therefore x = \left(\frac{1}{T_2^3}-\frac{1}{T_1^3}\right)$$

IAPT answer: (C) | **Zigyan answer:** (C)

25. Two charges – q and – q are placed at points (0, d) and (0, – d). A charge +q, free to move along X axis, will oscillate with a force proportional to

(A) $\frac{1}{x^2+d^2}$ (B) $\frac{1}{x^2}$

(C) $\frac{x}{\left(d^2+x^2\right)^{3/2}}$ (D) $\frac{1}{\sqrt{x^2+d^2}}$

Solution · Q25 **Answer: (C)**

When +q is at distance x along the axis, each negative charge pulls it with a force

$$F_1 = \frac{kq^2}{x^2+d^2}$$

The Y components cancel and the X components add.

$$\cos\theta = \frac{x}{\sqrt{x^2+d^2}}$$

$$F = 2F_1\cos\theta$$

$$\Rightarrow F = \frac{2kq^2x}{\left(x^2+d^2\right)^{3/2}}$$

$$\therefore F \propto \frac{x}{\left(x^2+d^2\right)^{3/2}}$$

IAPT answer: (C) | **Zigyan answer:** (C)

26. The average translational kinetic energy of oxygen (M = 32) molecules at a certain temperature is 0.048 eV. The translational kinetic energy of nitrogen (M = 28) molecules at the same temperature is (consider the two gases to be ideal)

(A) 0.0015 eV (B) 0.042 eV (C) 0.048 eV (D) 0.768 eV

Solution · Q26 **Answer: (C)**

Average translational kinetic energy per molecule:

$$\frac{1}{2}mv_{rms}^2 = \frac{3}{2}kT$$

It depends only on temperature, not on molar mass. So nitrogen also has 0.048 eV.

IAPT answer: (C) | **Zigyan answer:** (C)

27. The log-log graph for a non-linear oscillator is shown below. Assuming the constants to have appropriate dimensions the relationship between time period (T) and the amplitude (A) can be expressed as

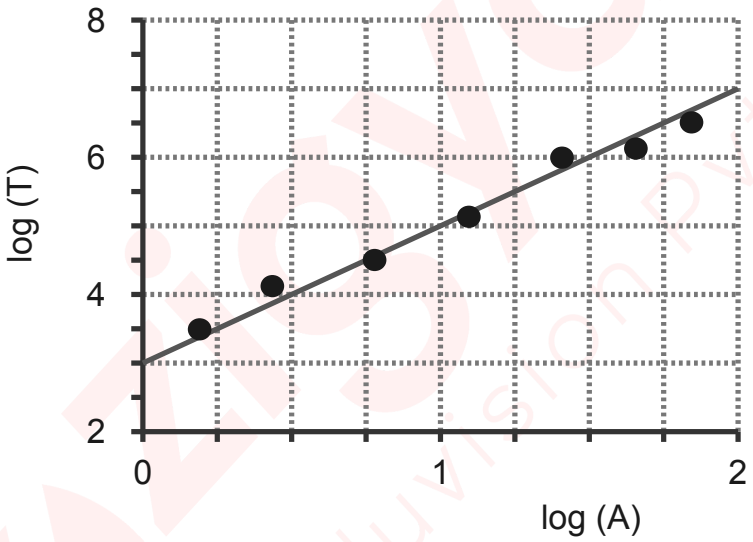

(A) $T = 1000A^2$ (B) $T = 4A^{1/2}$ (C) $T = 4A^2 + B$ (D) $T = 8A^3$

Solution · Q27 **Answer: (A)**

A power law gives a straight line on logarithmic axes.

$$\log T = n \log A + \log c$$

The drawn line passes through the points (0, 3) and (2, 7).

$$n = \frac{7-3}{2-0}$$

$$\Rightarrow n = 2$$

$$\log c = 3$$

$$\Rightarrow c = 1000$$

$$\therefore T = 1000A^2$$

IAPT answer: (A) | **Zigyan answer:** (A)

28. In many situations the point source emitting a wave starts moving, through the medium, with velocity V greater than the wave velocity in that medium. In such a case when source velocity (V) > wave velocity (v), the wave front changes

(A) from spherical to plane
(B) from spherical to conical
(C) from plane to spherical
(D) from cylindrical to spherical

Solution · Q28 **Answer: (B)**

The moving source runs ahead of the spherical waves it sends out. All these spheres touch a common cone with its tip at the source. Its half angle θ is given by

$$\sin\theta = \frac{v}{V}$$

So spherical waves build up a conical wavefront.

IAPT answer: (B) | **Zigyan answer:** (B)

29. If the average mass of a smoke particle in an Indian kitchen is 3×10^{-17} kg, the rms speed of the smoke particles at 27^0C is approximately

(A) 2 cm/sec (B) 2 m/sec (C) 2 km/sec (D) none of these

Solution · Q29 **Answer: (A)**

The smoke particle is in thermal equilibrium with the air.

$$\frac{1}{2}mv_{rms}^2 = \frac{3}{2}kT$$

$$T = 27 + 273$$

$$\Rightarrow T = 300\ K$$

$$v_{rms}^2 = \frac{3 \times 1.38 \times 10^{-23} \times 300}{3 \times 10^{-17}}$$

$$\Rightarrow {v_{rms}}^2 = 4.14 \times 10^{-4}$$

$$\Rightarrow v_{rms} \approx 2.03 \times 10^{-2}\ m\ s^{-1}$$

That is about 2 cm/s.

IAPT answer: (A) | **Zigyan answer:** (A)

30. Two wires, made of same material, one thick and the other thin are joined to form one composite wire. The composite wire is subjected to the same tension throughout. A wave travels along the wire and passes the point where the two wires are joined. The quantity which changes at the joint are

(A) frequency only.
(B) propagation speed only.
(C) wavelength only.
(D) both propagation speed and wavelength.

Solution · Q30 **Answer: (D)**

Both sides of the joint oscillate together, so the frequency is unchanged. Wave speed on a wire:

$$v = \sqrt{\frac{F}{\mu}}$$

With the same tension and material, the thicker wire has more mass per unit length, so the speed changes.

$$\lambda = \frac{v}{f}$$

Hence the wavelength changes too.

IAPT answer: (D) | **Zigyan answer:** (D)

31. The frequency of the third overtone of a closed end organ pipe equals the frequency of the fifth harmonic of an open end organ pipe. Ignoring end correction, the ratio of their lengths $l_{open} : l_{close}$ is

(A) 10:7 (B) 10:9 (C) 2:1 (D) 7:10

Solution · Q31 **Answer: (A)**

The third overtone of a closed pipe is its seventh harmonic.

$$f_1 = \frac{7v}{4l_{close}}$$

For the fifth harmonic of the open pipe,

$$f_2 = \frac{5v}{2l_{open}}$$

$$\frac{7}{4l_{close}} = \frac{5}{2l_{open}}$$

$$\therefore \frac{l_{open}}{l_{close}} = \frac{10}{7}$$

IAPT answer: (A) | **Zigyan answer:** (A)

32. A concave mirror has a radius of curvature R and forms the image of an object placed at a distance 1.5R from the pole of the mirror. An opaque disc of diameter half the aperture of the mirror is placed with the pole at the centre. As a result

(A) the position of the image will be the same but its central half will disappear

(B) the position of the image will be the same but its outer half will disappear

(C) the complete image will be seen at the same position and it will be exactly identical with the initial image

(D) the complete image will be seen at the same position but it will not be identical in all respect with the initial image.

Solution · Q32 **Answer: (D)**

The disc changes neither the focal length nor the object distance.

$$\frac{1}{v} = -\frac{2}{R} + \frac{2}{3R}$$

$$\Rightarrow v = -0.75R$$

Every uncovered part of the mirror still images the whole object. The disc blocks one quarter of the aperture area. So a complete but fainter image forms at the same place.

IAPT answer: (D) | **Zigyan answer:** (D)

33. A ray of white light is made incident on the refracting surface of a prism such that after refraction at this surface, the green component falls on the second surface at its critical angle. The colours present in the emergent beam will be

(A) violet, indigo and blue.

(B) violet, indigo , blue, yellow, orange and red.

(C) yellow, orange and red.

(D) all colours

Solution · Q33 **Answer: (C)**

$$\sin C = \frac{1}{\mu}$$

Green is just at its critical angle C at the second face. In the usual prism arrangement, a larger refractive index gives a larger angle at this face and a smaller critical angle.

So violet, indigo and blue are totally reflected, while yellow, orange and red emerge. Green only grazes the face.

IAPT answer: (C) | **Zigyan answer:** (C)

34. In a compound microscope, having tube-length 30 cm, the power of the objective and the eye-piece are100D and 10D respectively. Then the magnification produced by the microscope when the final image is at the least distance of distinct vision (25 cm) will be

(A) 55 (B) 64 (C) 77 (D) 90

Solution · Q34 **Answer: (C)**

Take the tube length as the separation of the lenses.

$$f_o = 1 \text{ cm}, f_e = 10 \text{ cm}$$

For the eyepiece,

$$\frac{1}{u_e} = -\frac{1}{25} - \frac{1}{10}$$

$$\Rightarrow u_e = -\frac{50}{7} \text{ cm}$$

$$m_e = \frac{v_e}{u_e}$$

$$\Rightarrow m_e = \frac{7}{2}$$

For the objective,

$$v_o = 30 - \frac{50}{7}$$

$$\Rightarrow v_o = \frac{160}{7} \text{ cm}$$

$$m_o = 1 - \frac{v_o}{f_o}$$

$$\Rightarrow m_o = -\frac{153}{7}$$

$$m = m_o m_e$$

$$\Rightarrow m = -76.5$$

The magnitude is about 77.

IAPT answer: (C) | **Zigyan answer:** (C)

35. Parallel rays are incident on a glass sphere of diameter 10 cm and having refractive index 1.5. The sphere converges these rays at a certain point. The distance of this point from the centre of the sphere will be

(A) 2.5 cm (B) 5 cm (C) 7.5 cm (D) 12.5 cm

Solution · Q35 **Answer: (C)**

For refraction at a spherical surface (paraxial rays),

$$\frac{\mu_2}{v} - \frac{\mu_1}{u} = \frac{\mu_2 - \mu_1}{R}$$

At the first face,

$$\frac{1.5}{v_1} = \frac{0.5}{5}$$

$$\Rightarrow v_1 = 15 \text{ cm}$$

This image lies 5 cm beyond the back face, so it is a virtual object for that face.

$$u = +5 \text{ cm}$$

$$\frac{1}{v} - \frac{1.5}{5} = \frac{1 - 1.5}{-5}$$

$$\Rightarrow v = 2.5 \text{ cm}$$

Distance from the centre:

$$x = 5 + 2.5$$

$$\therefore x = 7.5 \text{ cm}$$

IAPT answer: (C) | **Zigyan answer:** (C)

36. A jet of water from 15 cm diameter nozzle of a fire hose can reach the maximum height of 25 m. The force exerted by the water jet on the hose is

(A) 4.24 kN (B) 17.32 kN (C) 2.17 kN (D) 8.66 kN

Solution · Q36 **Answer: (D)**

Taking the jet vertical, with no air resistance,

$$v^2 = 2gh$$

$$\Rightarrow v^2 = 2 \times 9.8 \times 25$$

$$\Rightarrow v^2 = 490 \text{ m}^2 \text{ s}^{-2}$$

Area of the nozzle:

$$A = \frac{\pi d^2}{4}$$

$$\Rightarrow A \approx 1.767 \times 10^{-2} \text{ m}^2$$

The force is the rate at which the water gains momentum; its momentum inside the wide hose is neglected.

$$F = \rho A v^2$$

$$\Rightarrow F = 1000 \times 1.767 \times 10^{-2} \times 490$$

$$\therefore F \approx 8.66 \text{ kN}$$

IAPT answer: (D) | **Zigyan answer:** (D)

37. In an electromagnetic wave the phase difference between electric vector and magnetic vector is

(A) zero (B) $\frac{\pi}{2}$

(C) π (D) $\frac{3\pi}{2}$

Solution · Q37 **Answer: (A)**

Take a travelling plane wave in free space.

$$E_y = E_0 \sin(kx - \omega t)$$

By Faraday's law,

$$B_z = \frac{kE_0}{\omega}\sin(kx - \omega t)$$

Both fields have the same sine factor, so their phase difference is zero.

IAPT answer: (A) | **Zigyan answer:** (A)

38. A rectangular slab of glass of refractive index 1.5 is immersed in water of refractive index 1.33 such that the top surface of the slab remains parallel to water level. Light from a point source in air is incident on the surface of water at an angle α such that the light reflected from the glass slab is plane polarised, the angle α is

(A) 84.4° (B) 48.4° (C) 56.3° (D) 53.1°

Solution · Q38 **Answer: (A)**

Let θ be the angle of refraction in water; the ray meets the slab at this angle too. By Brewster's law at the water–glass face,

$$\tan\theta = \frac{1.5}{1.33}$$

$$\Rightarrow \tan\theta = 1.128$$

$$\Rightarrow \theta \approx 48.4°$$

$$\Rightarrow \sin\theta = 0.7482$$

By Snell's law at the water surface,

$$\sin\alpha = 1.33 \sin\theta$$

$$\Rightarrow \sin\alpha = 0.9952$$

$$\therefore \alpha \approx 84.4°$$

IAPT answer: (A) | **Zigyan answer:** (A)

39. In a spectrometer the smallest main scale division is $\frac{1}{3}$ of a degree. The total number of divisions on the vernier scale attached to the main scale is 60 which coincide with the 59 divisions of the main circular scale. The least count of the spectrometer is

(A) 20' (B) 20" (C) 30" (D) 30'

Solution · Q39 **Answer: (B)**

$$1\text{MSD} = \left(\frac{1}{3}\right)^\circ$$

$$\Rightarrow 1 \text{ MSD} = 20'$$

$$1\text{VSD} = \frac{59}{60}\text{MSD}$$

$$\text{LC} = 1 \text{ MSD} - 1 \text{ VSD}$$

$$\Rightarrow \text{LC} = \frac{1}{60}\text{MSD}$$

$$\therefore \text{LC} = 20''$$

IAPT answer: (B) | **Zigyan answer:** (B)

40. White light is used to illuminate two slits in Young's double sit experiment. Separation between the two slits is b and the screen is at a distance D (>>b) from the plane of slits. The wavelength missing at a point on the screen directly in front of one of the slits is

(A) $\frac{2b^2}{3D}$ (B) $\frac{2b^2}{D}$

(C) $\frac{b^2}{3D}$ (D) $\frac{b^2}{2D}$

Solution · Q40 **Answer: (C)**

At the point directly in front of one slit, the path difference is

$$\Delta = \sqrt{D^2 + b^2} - D$$

Since D is much larger than b,

$$\Delta \approx \frac{b^2}{2D}$$

For a missing wavelength, with m a natural number,

$$\frac{b^2}{2D} = (2m-1)\frac{\lambda}{2}$$

$$\Rightarrow \lambda = \frac{b^2}{(2m-1)D}$$

Only the second value of this set is among the options:

$$\lambda = \frac{b^2}{3D}$$

IAPT answer: (C) | **Zigyan answer:** (C)

41. In an ink-jet printer, an ink droplet of mass m is given a negative charge q by a computer-controlled charging unit. The charged droplet then enters the region between two deflecting parallel plates of length L separated by distance d (see figure below) with a speed v. All over this region there exists a uniform downward electric field E (in the plane of paper). Neglecting the gravitational force on the droplet, the maximum charge that can be given to this droplet, so that it does not hit any of the plates, is



(A) $\frac{mv^2L}{Ed^2}$ (B) $\frac{mv^2d}{EL^2}$

(C) $\frac{md}{Ev^2L^2}$ (D) $\frac{mv^2L^2}{Ed}$

Solution · Q41 **Answer: (B)**

As the figure shows, the droplet enters midway, so it may deflect by half the plate gap. With q as the size of the charge,

$$t = \frac{L}{v}$$

$$y = \frac{1}{2}\frac{qE}{m}t^2$$

$$\Rightarrow y = \frac{qEL^2}{2mv^2}$$

To miss the plate,

$$y \le \frac{d}{2}$$

$$\therefore q_{max} = \frac{mv^2d}{EL^2}$$

IAPT answer: (B) | **Zigyan answer:** (B)

42. A converging beam of light is pointing to P. Two observations are made with (i) a convex lens of focal length 20 cm and,(ii) a concave lens of focal length 16 cm placed in the path of the convergent beam at a distance 12 cm before the point P. It is observed that

(A) in both cases the images are real.

(B) in both cases the images are virtual.

(C) for (i) the image is real and for (ii) the image is virtual.

(D) for (i) the image is virtual and for (ii) the image is real.

Solution · Q42 **Answer: (A)**

The point P is a virtual object.

$$u = +12 \text{ cm}$$

$$\frac{1}{v} = \frac{1}{f} + \frac{1}{12}$$

For the convex lens:

$$\frac{1}{v} = \frac{1}{20} + \frac{1}{12}$$

$$\Rightarrow v = +7.5 \text{ cm}$$

For the concave lens:

$$\frac{1}{v} = -\frac{1}{16} + \frac{1}{12}$$

$$\Rightarrow v = +48 \text{ cm}$$

Both values are positive, so both images are real.

IAPT answer: (A) | **Zigyan answer:** (A)

43. A spherical capacitor is formed by two concentric metallic spherical shells. The capacitor is then charged so that the outer shell carries a positive charge and the inner shell carries an equal but negative charge. Even if the capacitor is not connected to any circuit, the charge will eventually leak away due to a small electrical conductivity of the material between the shells. What is the character of the magnetic field produced by this leakage current?

(A) Radially outwards from the inner shell to the outer shell.

(B) Radially inwards from the outer shell to the inner shell.

(C) Circular field lines between the shells and perpendicular to the radial direction.

(D) No magnetic field will be produced.

Solution · Q43 **Answer: (D)**

The leakage current is radial and spherically symmetric, so by symmetry any magnetic field could only be radial. The net magnetic flux through a closed sphere is zero.

$$4\pi r^2 B_r = 0$$

$$\Rightarrow B_r = 0$$

So no magnetic field is produced.

IAPT answer: (D) | **Zigyan answer:** (D)

44. If a cell of constant emf produces the same amount of heat during the same time in two independent resistors R_1 and R_2 when they are separately connected across the terminals of the cell, one after the other. The internal resistance of the cell is

(A) $\frac{R_1 + R_2}{2}$ (B) $\frac{R_1 \sim R_2}{2}$

(C) $\frac{\sqrt{R_1^2 + R_2^2}}{2}$ (D) $\sqrt{R_1 R_2}$

Solution · Q44 **Answer: (D)**

Heat produced in a resistor R in time t:

$$H = \frac{\varepsilon^2 R t}{(R + r)^2}$$

For equal heats,

$$\frac{R_1}{(R_1 + r)^2} = \frac{R_2}{(R_2 + r)^2}$$

$$\Rightarrow \sqrt{R_1}\ (R_2 + r) = \sqrt{R_2}\ (R_1 + r)$$

For two different resistors, this gives

$$r = \sqrt{R_1 R_2}$$

IAPT answer: (D) | **Zigyan answer:** (D)

45. In the circuit shown beside the charge on each capacitor is

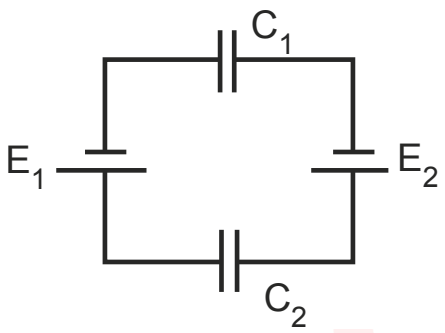

(A) $(C_1 + C_2)(E_1 - E_2)$

(B) $\frac{C_1 C_2}{C_1 + C_2}(E_1 + E_2)$

(C) $\frac{C_1 C_2}{C_1 + C_2}(E_1 - E_2)$

(D) $(C_1 - C_2)(E_1 + E_2)$

Solution · Q45 **Answer: (C)**

Both cells have the longer line at the bottom, so they oppose each other in the loop. In the steady state both capacitors carry the same charge. Taking the first emf as the larger,

$$\frac{q}{C_1} + \frac{q}{C_2} = E_1 - E_2$$

$$\therefore q = \frac{C_1 C_2}{C_1 + C_2}(E_1 - E_2)$$

IAPT answer: (C) | **Zigyan answer:** (C)

46. A stationary hydrogen atom emits photon corresponding to the first line (highest wave length) of Lyman series. If R is the Rydberg constant and M is the mass of the atom, the recoil velocity of the atom is

(A) $\frac{Rh}{4M}$

(B) $\frac{3Rh}{M}$

(C) $\frac{3Rh}{4M}$

(D) $\frac{Rh}{M}$

Solution · Q46 **Answer: (C)**

The first Lyman line is the jump from the second level to the first.

$$\frac{1}{\lambda} = R\left(\frac{1}{1^2} - \frac{1}{2^2}\right)$$

$$\Rightarrow \frac{1}{\lambda} = \frac{3R}{4}$$

By conservation of momentum,

$$Mv = \frac{h}{\lambda}$$

$$\therefore v = \frac{3Rh}{4M}$$

IAPT answer: (C) | **Zigyan answer:** (C)

47. Heat is absorbed or evolved when current flows in a conductor having a temperature gradient. This phenomenon is known as

(A) Joule effect (B) Peltier effect (C) Seeback effect (D) Thomson effect

Solution · Q47 **Answer: (D)**

This is the Thomson effect: a current-carrying conductor with a temperature gradient gives out or absorbs heat, apart from the Joule heat.

IAPT answer: (D) | **Zigyan answer:** (D)

48. Identify the rank in order from the dimmest to the brightest when all the identical bulbs are connected in the circuit as shown below.

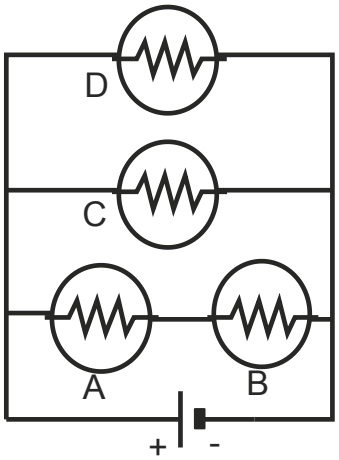

(A) A = B > C = D (B) A = B = C = D (C) A > C > B > D (D) A = B < C = D

Solution · Q48 **Answer: (D)**

Across the cell there are three parallel branches: bulb C, bulb D, and bulbs A and B in series. With V across each branch,

$$P_C = P_D = \frac{V^2}{R}$$

$$P_A = P_B = \frac{(V/2)^2}{R}$$

$$\Rightarrow P_A = P_B = \frac{V^2}{4R}$$

So in order of brightness,

$$A = B < C = D$$

IAPT answer: (D) | **Zigyan answer:** (D)

49. The unit of magnetizing field is

(A) tesla (B) newton

(C) ampere (D) ampere turn/meter

Solution · Q49 **Answer: (D)**

For a long solenoid,

$$H = nI$$

Here n is the number of turns per metre and I the current, so the unit is ampere turn per metre.

IAPT answer: (D) | **Zigyan answer:** (D)

50. A star undergoes a supernova explosion. Just after the explosion, the material left behind forms a uniform sphere of radius 8000 km with a rotation period of 15 hours. This remaining material eventually collapses into a neutron star of radius 4 km with a period of rotation

(A) 14 s (B) 3.8 h (C) 0.021 s (D) 0.0135 s

Solution · Q50 **Answer: (D)**

No external torque acts, so angular momentum is conserved. Taking uniform spheres that keep the same mass,

$$\frac{2}{5}MR_1^2\frac{2\pi}{T_1} = \frac{2}{5}MR_2^2\frac{2\pi}{T_2}$$

$$\Rightarrow T_2 = T_1\left(\frac{R_2}{R_1}\right)^2$$

$$\frac{R_2}{R_1} = \frac{4}{8000}$$

$$T_1 = 15 \times 3600$$

$$\Rightarrow T_1 = 54000 \text{ s}$$

$$T_2 = \frac{54000}{4\times 10^6}$$

$$\therefore T_2 = 0.0135 \text{ s}$$

IAPT answer: (D) | **Zigyan answer:** (D)

51. A number of identical absorbing plates are arranged in between a source of light and a photo cell. When there is no plate in between, the photo current is maximum. Under the circumstances let us focus on the two statements -

(1) The photo current decreases with the increase in number of absorbing plates.

(2) The stopping potential increases with the increase in number of absorbing plates.

(A) Statements (1) and (2) are both true and (1) is the cause of (2).

(B) Statements (1) and (2) are both true but (1) and (2) are independent.

(C) Statement (1) is true while (2) is not true and (1) and (2) are independent.

(D) Statement (1) is true while (2) is not true and (2) is the effect of (1).

Solution · Q51 **Answer: (C)**

More plates let fewer photons reach the cathode, so the photocurrent falls and (1) is true. The photons that get through keep their frequency.

$$eV_0 = h\nu - \phi$$

So the stopping potential does not rise: (2) is false, and the two are independent.

IAPT answer: (C) | **Zigyan answer:** (C)

52. In a nuclear reaction, two photons each of energy 0.51 MeV are produced by electron-positron annihilation. The wavelength associated with each photon is

(A) 2.44×10^{-12}m (B) 2.44×10^{-8}m (C) 1.46×10^{-12}m (D) 3.44×10^{-10}m

Solution · Q52 **Answer: (A)**

The pair is almost at rest, so each photon gets 0.51 MeV.

$$\lambda = \frac{hc}{E}$$

$$\Rightarrow \lambda = \frac{1240}{0.51 \times 10^6}\ \text{nm}$$

$$\Rightarrow \lambda \approx 2.43 \times 10^{-3}\ \text{nm}$$

$$\Rightarrow \lambda \approx 2.43 \times 10^{-12}\ \text{m}$$

With hc taken as 1242 eV nm, this rounds to the printed 2.44×10^{-12} m.

IAPT answer: (A) | **Zigyan answer:** (A)

53. In the circuit shown if an ideal ammeter is connected between A and B then the direction of current and the current reading would be (assume I_s remains unchanged)

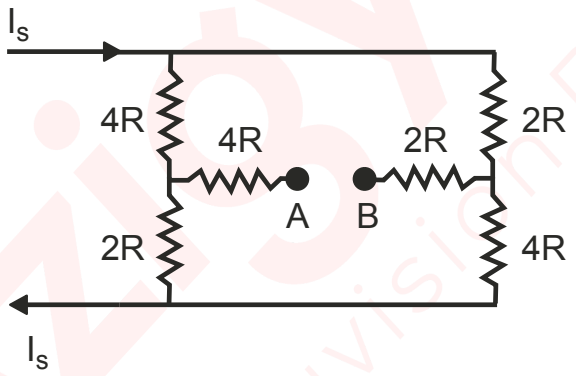

(A) B to A and $I_s/2$ (B) A to B and $I_s/4$

(C) B to A and $I_s/9$ (D) B to A and $I_s/3$

Solution · Q53 **Answer: (C)**

The ideal ammeter makes the two inner arms one path of resistance 6R between the left junction P and the right junction Q. Take the bottom wire at zero and the top wire at V. By symmetry,

$$V_P + V_Q = V$$

At junction P,

$$\frac{V - V_P}{4R} = \frac{V_P}{2R} + \frac{V_P - V_Q}{6R}$$

$$\Rightarrow V_P = \frac{5V}{13}$$

$$\Rightarrow V_Q = \frac{8V}{13}$$

$$I = \frac{V_Q - V_P}{6R}$$

$$\Rightarrow I = \frac{V}{26R}$$

$$I_s = \frac{V - V_P}{4R} + \frac{V - V_Q}{2R}$$

$$\Rightarrow I_s = \frac{9V}{26R}$$

$$\therefore I = \frac{I_s}{9}$$

Through the ammeter it flows from B to A.

IAPT answer: (C) | **Zigyan answer:** (C)

54. Avalanche breakdown in a p-n junction primarily depends on the phenomenon of

(A) doping (B) collision (C) recombination (D) ionization

Solution · Q54 **Answer: (B)**

Under a large reverse bias, carriers gain enough energy to break bonds when they collide with the lattice. The freed carriers repeat this and multiply.

Collision marks out this process, since Zener breakdown also ionizes, by the field itself.

IAPT answer: (B) | **Zigyan answer:** (B)

55. A source emits photons of energy 5 eV which are incident on a metallic sphere of work function 3.0 eV. The radius of the sphere is r = 8 x 10^{-3} m. It is observed that after some time emission of photoelectrons from the metallic sphere is stopped. Charge on the sphere when the photoemission stops is.

(A) 1.77×10^{-16} C (B) 1.77×10^{-12} C (C) 1.11×10^{-12} C (D) 1.11×10^{-10} C

Solution · Q55 **Answer: (B)**

Maximum kinetic energy of a photoelectron:

$$K_{max} = 5 - 3.0$$

$$\Rightarrow K_{max} = 2 \text{ eV}$$

So emission stops when the sphere reaches a potential of 2 V.

$$V = \frac{Q}{4\pi\varepsilon_0 r}$$

$$\Rightarrow Q = 4\pi\varepsilon_0 rV$$

$$\Rightarrow Q = \frac{\left(8 \times 10^{-3}\right) \times 2}{9 \times 10^9}$$

$$\therefore Q \approx 1.78 \times 10^{-12} \text{ C}$$

The paper's 1.77×10^{-12} C is this value cut off after two decimals.

IAPT answer: (B) | **Zigyan answer:** (B)

56. The dc component of current in the output of a half-wave rectifier with peak value I_o is

(A) zero
(B) $\frac{I_0}{\pi}$
(C) $\frac{I_0}{2\pi}$
(D) $\frac{2I_0}{\pi}$

Solution · Q56 **Answer: (B)**

Average over a full period; the diode conducts for only half of it.

$$I_{dc} = \frac{1}{2\pi}\int_0^{\pi} I_0 \sin\theta d\theta$$

$$\Rightarrow I_{dc} = \frac{2I_0}{2\pi}$$

$$\therefore I_{dc} = \frac{I_0}{\pi}$$

IAPT answer: (B) | **Zigyan answer:** (B)

57. In an experiment on photoelectric effect, the slope of straight line graph between the stopping potential and the frequency of incident radiation gives

(A) Electron charge (e)
(B) Planck constant (h)
(C) $\frac{h}{e}$
(D) Work function (W)

Solution · Q57 **Answer: (C)**

By Einstein's photoelectric equation,

$$eV_0 = h\nu - W$$

$$\Rightarrow V_0 = \left(\frac{h}{e}\right)\nu - \frac{W}{e}$$

So the slope of the line is h/e.

IAPT answer: (C) | **Zigyan answer:** (C)

58. According to Bohr's theory the ionization energy of H atom is 13.6 eV. The energy needed to remove an electron from Helium ion (He^+) is

(A) 13.6 eV (B) 16.8 eV (C) 27.2 eV (D) 54.4 eV

Solution · Q58 **Answer: (D)**

For a hydrogen-like ion,

$$E_n = -13.6\frac{Z^2}{n^2}\text{ eV}$$

For the ground state of this ion,

$$Z = 2,\ n = 1$$

$$E_1 = -13.6 \times 4$$

$$\Rightarrow E_1 = -54.4\text{ eV}$$

So the energy needed to remove the electron is 54.4 eV.

IAPT answer: (D) | **Zigyan answer:** (D)

59. The phenomenon inverse to photo electric effect is

(A) Compton effect
(B) Pair production
(C) Raman effect
(D) Production of X-rays in Coolidge tube

Solution · Q59 **Answer: (D)**

In the photoelectric effect a photon goes in and an electron comes out. In a Coolidge tube fast electrons strike a target and X-ray photons come out, which is the reverse process.

IAPT answer: (D) | **Zigyan answer:** (D)

60. A stationary hydrogen atom emits a photon of wavelength 1025 Å. Its angular momentum changes by

(A) $\frac{h}{\pi}$
(B) $\frac{2h}{\pi}$
(C) $\frac{h}{2\pi}$
(D) $\frac{3h}{2\pi}$

Solution · Q60 **Answer: (A)**

This wavelength lies in the Lyman series, so the final level is the first. Bohr's value of the electron's angular momentum is meant.

$$\frac{1}{\lambda} = R\left(1 - \frac{1}{n^2}\right)$$

$$R = 1.097 \times 10^{7}\ m^{-1},\ \lambda = 1.025 \times 10^{-7}\ m$$

$$\Rightarrow R\lambda \approx 1.124$$

$$\Rightarrow \frac{1}{n^2} = 1 - \frac{1}{R\lambda}$$

$$\Rightarrow \frac{1}{n^2} \approx 0.111$$

$$\Rightarrow n = 3$$

$$\Delta L = \frac{3h}{2\pi} - \frac{h}{2\pi}$$

$$\therefore \Delta L = \frac{h}{\pi}$$

IAPT answer: (A) | **Zigyan answer:** (A)

PART A-2 · ONE OR MORE CORRECT OPTIONS

Q. 61 – 70 · 6 marks only if all correct options are marked · no negative marking

61. A block of mass m = 10 kg is hanging over a frictionless light fixed pulley by an inextensible light rope. Initially the block is held at rest. The other end of the rope is now pulled by a constant force F in the vertically downward direction. The linear momentum of the block is seen to increase by 2 kgm/s in 1 s (in the first second). Therefore,

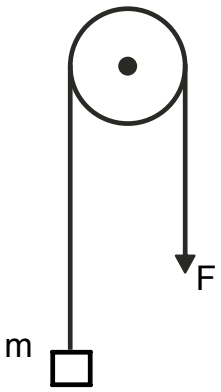

(A) the tension in the rope is F

(B) the tension in the rope is 3N

(C) the work done by the tension on the block, in first second, is = 19.8 J

(D) the work done against the force of gravity, in first second, is = 9.8 J

Solution · Q61 **Answer: (A), (D)**

(A) With an ideal rope and pulley, the tension everywhere equals the applied force. So (A) is true.

(B) The net force is the rate of change of momentum.

$$T - mg = \frac{\Delta p}{\Delta t}$$

$$\Rightarrow T - mg = 2\ N$$

Taking g as 9.8 m s^{-2},

$$T = 98 + 2$$

$$\Rightarrow T = 100\ N$$

So (B) is false.

(C) The acceleration is 0.2 m s^{-2}. Rise in the first second:

$$s = \frac{1}{2} \times 0.2 \times 1^2$$

$$\Rightarrow s = 0.1\ m$$

$$W_T = Ts$$

$$\Rightarrow W_T = 10\ J$$

So (C) is false.

(D)

$$mgs = 10 \times 9.8 \times 0.1$$

$$\Rightarrow mgs = 9.8\ J$$

So (D) is true.

IAPT answer: (A), (D) | **Zigyan answer:** (A), (D)

62. A ball of mass m_1 travels horizontally along the x-axis in the positive direction with an initial speed of v_0. It collides with another ball of mass m_2 that is originally at rest. After the collision, the ball of mass m_1 has velocity $\left(v_{1x}\hat{i} + v_{1y}\hat{j}\right)$ and the ball of mass m_2 has velocity $\left(v_{2x}\hat{i} + v_{2y}\hat{j}\right)$. Identify the correct relationship(s)

(A) $0 = m_1v_{1x} + m_2v_{2x}$

(B) $m_1v_0 = m_1v_{1y} + m_2v_{2y}$

(C) $0 = m_1v_{1y} + m_2v_{2y}$

(D) $m_1v_0 = m_1v_{1x} + m_2v_{2x}$

Solution · Q62 **Answer: (C), (D)**

Momentum is conserved separately in each direction. Along y,

$$0 = m_1v_{1y} + m_2v_{2y}$$

Along x,

$$m_1v_0 = m_1v_{1x} + m_2v_{2x}$$

So (C) and (D) are true, while (A) and (B) are false.

IAPT answer: (C), (D) | **Zigyan answer:** (C), (D)

63. In a real gas

(A) the force of attraction between the molecules depends upon intermolecular distance.

(B) internal energy depends only upon temperature.

(C) internal energy is a function of both temperature and volume.

(D) internal energy is a function of both temperature and pressure.

Solution · Q63 **Answer: (A), (C), (D)**

(A) The attraction between molecules depends on their separation: true.

(B), (C) At a fixed temperature, expansion changes the intermolecular potential energy. So internal energy depends on volume too: (B) is false and (C) is true.

(D) In the gas phase, temperature and pressure fix the volume. So (D) is also true.

IAPT answer: (A), (C), (D) | **Zigyan answer:** (A), (C), (D)

64. A particle of mass m is thrown vertically up with velocity u. Air exerts an opposing force of a constant magnitude F. The particle returns back to the point of projection with velocity v after attaining maximum height h, then

(A) $h = \dfrac{u^2}{2\left(g + \frac{F}{m}\right)}$

(B) $h = \dfrac{v^2}{2\left(g - \frac{F}{m}\right)}$

(C) $v = u\sqrt{\dfrac{\left(g - \frac{F}{m}\right)}{\left(g + \frac{F}{m}\right)}}$

(D) $v = u\sqrt{\dfrac{\left(g + \frac{F}{m}\right)}{\left(g - \frac{F}{m}\right)}}$

Solution · Q64 **Answer: (A), (B), (C)**

Going up, the retardation is

$$a_1 = g + \frac{F}{m}$$

$$0 = u^2 - 2a_1h$$

$$\Rightarrow h = \frac{u^2}{2\left(g + \frac{F}{m}\right)}$$

So (A) is true. Coming down, the acceleration is

$$a_2 = g - \frac{F}{m}$$

$$v^2 = 2a_2h$$

$$\Rightarrow h = \frac{v^2}{2\left(g - \frac{F}{m}\right)}$$

So (B) is true. Equating the two heights,

$$v = u\sqrt{\frac{g - F/m}{g + F/m}}$$

So (C) is true and (D) is false.

IAPT answer: (A), (B), (C) | **Zigyan answer:** (A), (B), (C)

65. A pin of small length 'a' is placed along the axis of a concave mirror of focal length f, at the distance u (> f) from its pole. The length of its image is 'b'. If the same object is placed perpendicular to its axis at the same distance u and the length of its image is now 'c', then

(A) $b = a\dfrac{f^2}{(u - f)^2}$

(B) $c = \sqrt{ab}$

(C) $c = b\dfrac{u - f}{f}$

(D) $bc = \dfrac{a^2f^3}{(u - f)^3}$

Solution · Q65 **Answer: (A), (B), (C), (D)**

With distances in front of the mirror positive,

$$v = \frac{uf}{u - f}$$

$$m = \frac{v}{u}$$

$$\Rightarrow m = \frac{f}{u - f}$$

For the pin across the axis,

$$c = ma$$

$$\Rightarrow c = \frac{af}{u - f}$$

For the short pin along the axis,

$$b = am^2$$

$$\Rightarrow b = \frac{af^2}{(u - f)^2}$$

So (A) is true.

$$\sqrt{ab} = \frac{af}{u - f}$$

$$\Rightarrow \sqrt{ab} = c$$

So (B) is true.

$$b\frac{u - f}{f} = \frac{af}{u - f}$$

$$\Rightarrow b\frac{u - f}{f} = c$$

So (C) is true.

$$bc = \frac{a^2f^3}{(u - f)^3}$$

So (D) is true.

IAPT answer: (A), (B), (C), (D) | **Zigyan answer:** (A), (B), (C), (D)

66. A thin rod of length 10 cm. is placed along the axis of a concave mirror of focal length 30 cm in such a way that one end of the image coincides with one end of the object. The length of the image may be

(A) 7.5 cm (B) 12 cm (C) 15 cm (D) 10 cm

Solution · Q66 **Answer: (A), (C), (D)**

With lengths in cm,

$$v = \frac{30u}{u - 30}$$

Either an end is its own image, as at the centre of curvature C, or one end images onto the other.

For an end at C with the rod pointing away, the far end gives

$$v = \frac{30 \times 70}{40}$$

$$\Rightarrow v = 52.5 \text{ cm}$$

The image is 7.5 cm long: (A) is possible.

With the rod pointing towards the mirror,

$$v = \frac{30 \times 50}{20}$$

$$\Rightarrow v = 75 \text{ cm}$$

The image is 15 cm long: (C) is possible. An end at the pole gives this length again.

If one end images onto the other,

$$\frac{30u}{u - 30} = u + 10$$

$$\Rightarrow u^2 - 50u - 300 = 0$$

$$\Rightarrow u \approx 55.4 \text{ cm}$$

By reversibility the two ends interchange, so the image is 10 cm long: (D) is possible. No case gives 12 cm, so (B) is false.

IAPT answer: (A), (C), (D) | **Zigyan answer:** (A), (C), (D)

67. The mass of an electron can be expressed as

where c is speed of light in vacuum

(A) 0.512 MeV

(B) 8.19×10^{-14} J/c^2

(C) 9.1×10^{-31} kg

(D) 0.00055 amu

Solution · Q67 **As per Zigyan: (B), (C), (D)**

(C) The electron's mass is about 9.1×10^{-31} kg: true.

(B) Rest energy:

$$E = 9.1 \times 10^{-31} \times 9 \times 10^{16}$$

$$\Rightarrow E = 8.19 \times 10^{-14} \text{ J}$$

Dividing by c^2 gives the mass: true.

(D)

$$m = \frac{9.109 \times 10^{-31}}{1.6605 \times 10^{-27}}$$

$$\Rightarrow m \approx 0.000549 \text{ amu}$$

This rounds to the value in (D): true.

(A) MeV is a unit of energy, and the c^2 needed to express a mass is missing: false. The printed figure comes from multiplying 0.00055 by 931 MeV.

Why Zigyan differs from IAPT: MeV has the dimensions of energy, not of mass. Dropping c^2 needs units in which c is one, which this question does not use.

Reference: NCERT Physics Class XII (Part II), Chapter 13 'Nuclei', Example 13.3: 931.5 MeV is the energy equivalent of one atomic mass unit.

Reference: As a mass, the same example writes it as 931.5 MeV/c^2.

IAPT answer: (A), (B), (C), (D) | **Zigyan answer:** (B), (C), (D)

68. Select the correct statement(s), out of the following, about diffraction at N parallel slits.

(A) There are (N – 1) minima between each pair of principal maxima.

(B) There are (N – 2) secondary maxima between each pair of principal maxima.

(C) Width of principal maximum is proportional to 1/N.

(D) The intensity at the principal maxima varies as N^2.

Solution · Q68 **Answer: (A), (B), (C), (D)**

For N slits with spacing d,

$$\gamma = \frac{\pi d \sin\theta}{\lambda}$$

$$I = I_1\left(\frac{\sin N\gamma}{\sin\gamma}\right)^2$$

At a principal maximum, sin γ vanishes.

$$I = N^2 I_1$$

So (D) is true. At the minima,

$$\gamma = \frac{k\pi}{N}$$

$$k = 1, 2, \ldots, N-1$$

So there are N − 1 minima, with N − 2 secondary maxima between them: (A) and (B) are true.

Half width of a principal maximum:

$$\Delta\theta = \frac{\lambda}{N d\cos\theta}$$

So the width varies inversely as N: (C) is true.

IAPT answer: (A), (B), (C), (D) | **Zigyan answer:** (A), (B), (C), (D)

69. An electric dipole placed in a non-uniform electric field may experience

(A) no net force, no torque.
(B) a net force, but no torque.
(C) no net force, but a torque.
(D) a net force and a torque.

Solution · Q69 **As per Zigyan: (A), (B), (C), (D)**

Take this non-uniform electrostatic field, with non-zero constants:

$$\vec{E} = (E_0 + kx)\hat{i} - ky\hat{j}$$

(A) Put a dipole parallel to z at this point:

$$x = -\frac{E_0}{k},\ y = 0$$

Both charges are in zero field: no force and no torque.

(C) Move it to another point of the x axis. Both charges feel the same field: no force, but a torque.

(B) With the dipole along the x axis, the two charges feel unequal fields parallel to it: a force, but no torque.

(D) With the dipole parallel to y, centred on the x axis where the field is not zero,

$$\vec{F} = -kp\hat{j}$$

The mean field also twists it: a force and a torque.

Why Zigyan differs from IAPT: this valid non-uniform field gives no net force on a dipole parallel to z, both without and with a torque.

Reference: NCERT Physics Class XII (Part I), Chapter 1, section 1.14.1: a long charged wire's field is radial and depends only on distance from it.

So a dipole parallel to such a wire has no net force but a torque, as in (C).

IAPT answer: (B), (D) | **Zigyan answer:** (A), (B), (C), (D)

70. Two long parallel wires carry currents of equal magnitude (I) but in opposite directions. These wires are suspended from fixed rod PQ by four chords of equal length L as shown. The mass per unit length of each wire is λ , the value of angle θ substended by two chords OA and OB, assuming it to be small, is

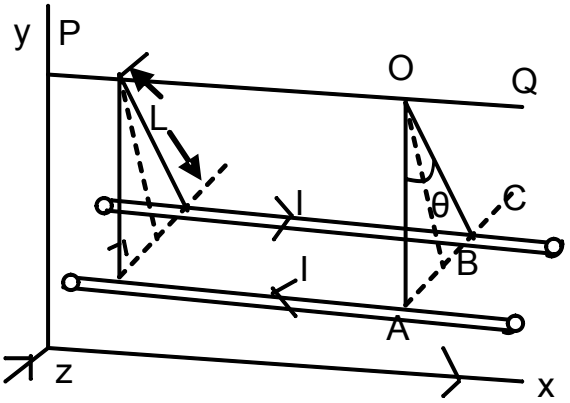

(A) $\theta = I\sqrt{\frac{\mu_0}{4\pi}\frac{\lambda}{gL}}$

(B) $\theta = I\sqrt{\frac{\mu_0}{\pi}\frac{1}{\lambda gL}}$

(C) $\theta = I\sqrt{\frac{\mu_0}{4\pi}\frac{g}{\lambda L}}$

(D) $\theta = I\sqrt{\frac{\mu_0}{\pi}\frac{\lambda g}{L}}$

Solution · Q70 **Answer: (B)**

The wires repel, and each chord makes half of θ with the vertical. Separation of the wires, for a small angle:

$$r = 2L\sin\frac{\theta}{2}$$

$$\Rightarrow r \approx L\theta$$

Repulsive force per unit length:

$$f = \frac{\mu_0 I^2}{2\pi r}$$

For a length ℓ of one wire, with S the total pull of its chords,

$$S\cos\frac{\theta}{2} = \lambda \ell g$$

$$S\sin\frac{\theta}{2} = f\ell$$

$$\Rightarrow \tan\frac{\theta}{2} = \frac{f}{\lambda g}$$

$$\Rightarrow \frac{\theta}{2} = \frac{\mu_0 I^2}{2\pi L\theta\lambda g}$$

$$\therefore \theta = I\sqrt{\frac{\mu_0}{\pi\lambda gL}}$$

IAPT answer: (B) | **Zigyan answer:** (B)

ANSWER KEY

NSEP 2019 · PAPER CODE 61

70
QUESTIONS · 240 MARKS

IAPT final answer key for paper code 61. ★ marks an answer given as per Zigyan.

1	(D)	2	(B)	3	(C)	4	(D)	5	(D)
6	(D)	7	(D)	8	(B)	9	(D)	10	(C)
11	(C)★	12	(B)	13	—★	14	(B)	15	(D)
16	(A)	17	(A)	18	(D)	19	(C)	20	(A)
21	(D)	22	(A)	23	(B)	24	(C)	25	(C)
26	(C)	27	(A)	28	(B)	29	(A)	30	(D)
31	(A)	32	(D)	33	(C)	34	(C)	35	(C)
36	(D)	37	(A)	38	(A)	39	(B)	40	(C)
41	(B)	42	(A)	43	(D)	44	(D)	45	(C)
46	(C)	47	(D)	48	(D)	49	(D)	50	(D)
51	(C)	52	(A)	53	(C)	54	(B)	55	(B)
56	(B)	57	(C)	58	(D)	59	(D)	60	(A)
61	(A), (D)	62	(C), (D)	63	(A), (C), (D)	64	(A), (B), (C)	65	(A), (B), (C), (D)
66	(A), (C), (D)	67	(B), (C), (D)★	68	(A), (B), (C), (D)	69	(A), (B), (C), (D)★	70	(B)

★ Answers as per Zigyan

- **Q11** — As per Zigyan: (C); dropped by IAPT.
- **Q13** — As per Zigyan: no option is correct; IAPT key (D).
- **Q67** — As per Zigyan: (B), (C), (D); IAPT key (A), (B), (C), (D).
- **Q69** — As per Zigyan: (A), (B), (C), (D); IAPT key (B), (D).

zigyan

OLYMPIADS · 2026

Olympiad results



TOP ACHIEVEMENT · CHEMISTRY

Qualified the Chemistry Olympiad twice, and selected for the HBCSE camp.

Saksham Bishnoi reached the national stage of the Chemistry Olympiad in two consecutive years and was selected for the Orientation-cum-Selection Camp at HBCSE, Mumbai. 4 Years Classroom - the same student who took AIR 168 in JEE Advanced 2026.

Qualified twice | HBCSE selection camp | Only student from Faridabad

Above MAS means above the **Minimum Admissible Score**: clearing it puts a student in the national band for their subject. It is a real threshold, not a participation marker.

CHEMISTRY · ABOVE MAS



Sulokya Bibhuty
Class XII
3 Years Classroom
Above MAS



Anay Gupta
Class XI
3 Years Classroom
Above MAS



Akshat Khator
Class XI
3 Years Classroom
Above MAS



Harshit Goyal
Class XII
4 Years Classroom
Above MAS



Hardik Sharma
Class XI
3 Years Classroom
Above MAS



Aarush Kumar
Class XII
1 Year Classroom
Above MAS

PHYSICS · ASTRONOMY · MATHEMATICS

PHYSICS



Sulokya Bibhuty
Class XII
3 Years Classroom
Above MAS

PHYSICS



Saksham Bishnoi
Class XII
4 Years Classroom
Above MAS

ASTRONOMY



Sulokya Bibhuty
Class XI
3 Years Classroom
Above MAS

MATHEMATICS · IOQM



Priyanshi
Class XI
4 Years Classroom
IOQM Qualifier

OLYMPIADS WE PREPARE STUDENTS FOR

NSEP	NSEC	NSEB	NSEA	IOQM	NSEJS
Physics	Chemistry	Biology	Astronomy	Mathematics	Class X and below

The olympiad pathway starts in Class 8.

NSEJS is open to Class 10 and below - the habit of staying with one hard problem is the one JEE Advanced rewards.

Zigyan Eduvision Pvt. Ltd. · SCO No. 107, Sector 16, Faridabad 121002
0129-4048800 · +91 92115 38800 · info@zigyan.com

zigyan

RESULTS · 2021 – 2026

Our toppers, year by year

40
JEE Advanced selections in 6 years

AIR 168
best rank — Saksham Bishnoi, 2026

16 of 35
students selected, JEE Advanced 2026

14 of 35
above 98 percentile, JEE Main 2026

JEE ADVANCED SELECTIONS PER YEAR

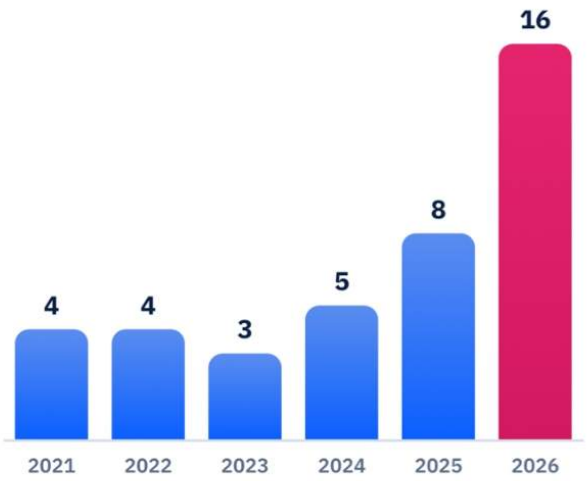

BEST RANK EACH YEAR

YEAR	JEE ADVANCED	JEE MAIN
2026	**Saksham Bishnoi** AIR 168 · 4 Years Classroom	**Saksham Bishnoi** AIR 811 · 99.95 %ile
2025	**Chakshu** AIR 4,233 · 2 Years Classroom	**Chakshu** AIR 8,538 · 99.44 %ile
2024	**Harshit** AIR 777 · 2 Years Classroom	**Harshit** AIR 1,473 · 99.91 %ile
2023	**Aditya Jain** AIR 2,373 · 2 Years Classroom	**Aditya Jain** AIR 2,503 · 99.79 %ile
2022	**Rachit Sharma** AIR 698 · 1 Year Classroom	**Rachit Sharma** AIR 1,016 · 99.90 %ile
2021	**Sparsh Mittal** AIR 2,237 · 1 Year Classroom	**Sparsh Mittal** AIR 1,562

JEE ADVANCED 2026 — THIRTEEN NAMED SELECTIONS



Saksham Bishnoi
AIR 168
4 Years Classroom



Sulokya Bibhuty
AIR 1,315
3 Years Classroom



Aarush
AIR 2,699
1 Year Classroom



Manishka
AIR 2,869
4 Years Classroom



Oojit Kumar
AIR 5,765
4 Years Classroom



Harshit Goyal
AIR 6,407
4 Years Classroom



Pranab Sharma
AIR 6,750
3 Years Classroom



Aditya Dhar
AIR 15,183
3 Years Classroom



Arpit Anshuman
AIR 19,308
4 Years Classroom



Lokesh
AIR 22,857
3 Years Classroom



Arjun
AIR 24,674
3 Years Classroom



Sanyam Gulyani
AIR 25,123
1 Year Classroom



Saket
AIR 27,628
3 Years Classroom

Sixteen students of the 2026 batch were selected in JEE Advanced; the thirteen above are named with their All India Rank.

JEE MAIN 2026 — TOP SIX, WITH PERCENTILE



Saksham Bishnoi
AIR 811
99.95 %ile
4 Years Classroom



Sulokya Bibhuty
AIR 1,095
99.94 %ile
3 Years Classroom



Harshit Goyal
AIR 2,662
99.83 %ile
4 Years Classroom



Manishka
AIR 4,817
99.70 %ile
4 Years Classroom



Oojit Kumar
AIR 5,040
99.69 %ile
4 Years Classroom



Aarush
AIR 5,276
99.67 %ile
1 Year Classroom

14 of the 35 students in the 2026 batch scored above the 98th percentile in JEE Main.

Zigyan Eduvision Pvt. Ltd. · SCO No. 107, Sector 16, Faridabad 121002
0129-4048800 · +91 92115 38800 · info@zigyan.com